Service Training

Self Study Program 823603

VW 3.2 and 3.6 liter FSI Engine

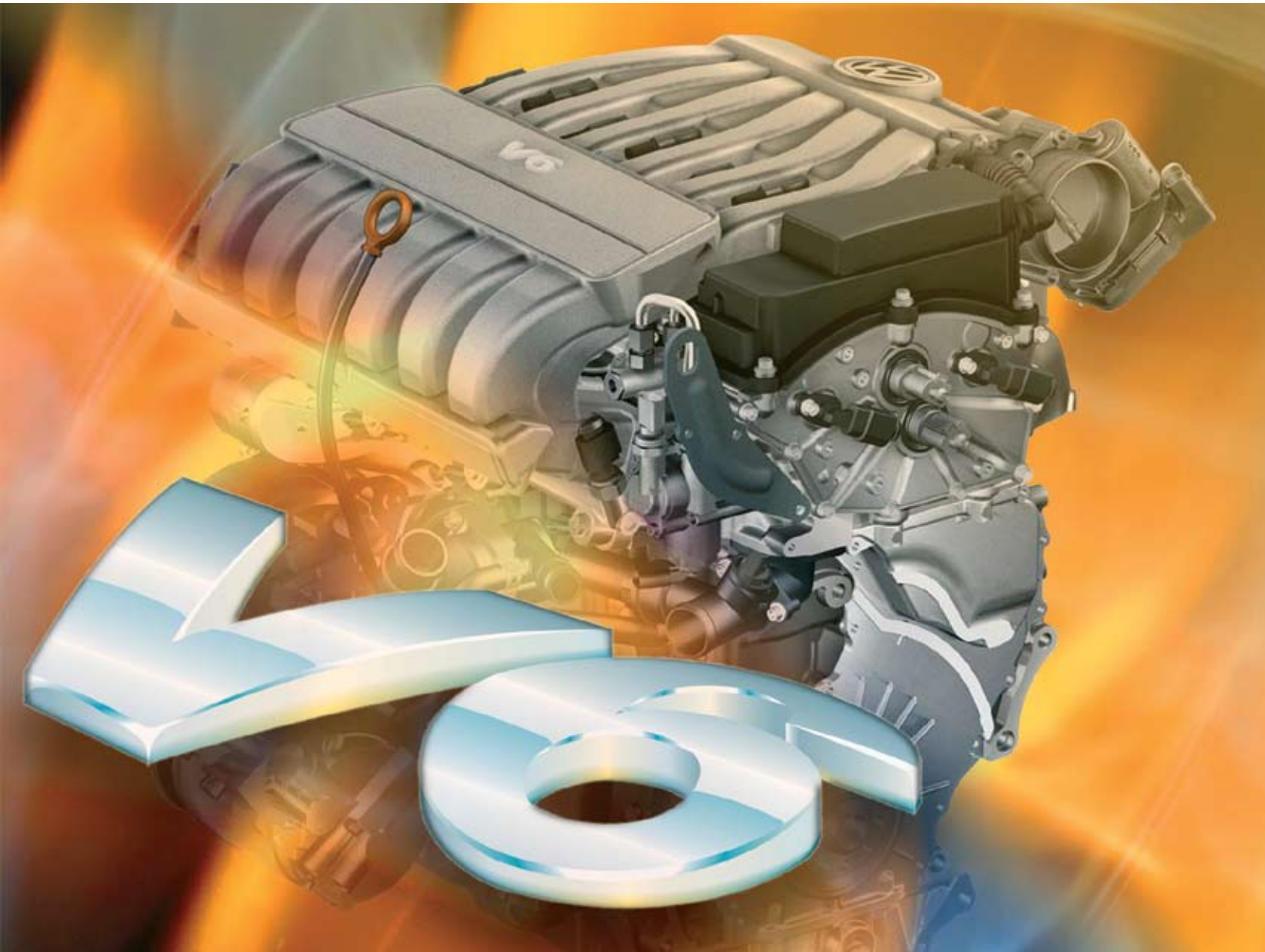

Volkswagen of America, Inc.
Volkswagen Academy
Printed in U.S.A.
Printed 10/2006
Course Number 823603

©2006 Volkswagen of America, Inc.

All rights reserved. All information contained in this manual is based on the latest information available at the time of printing and is subject to the copyright and other intellectual property rights of Volkswagen of America, Inc., its affiliated companies and its licensors. All rights are reserved to make changes at any time without notice. No part of this document may be reproduced, stored in a retrieval system, or transmitted in any form or by any means, electronic, mechanical, photocopying, recording or otherwise, nor may these materials be modified or reposted to other sites without the prior expressed written permission of the publisher.

All requests for permission to copy and redistribute information should be referred to Volkswagen of America, Inc.

Always check Technical Bulletins and the latest electronic repair information for information that may supersede any information included in this booklet.

Trademarks: All brand names and product names used in this manual are trade names, service marks, trademarks, or registered trademarks; and are the property of their respective owners.

Contents

Overview 1

Basics 4

Engine Mechanics 15

Engine Management 40

Operating Diagrams 59

Service 65

Knowledge Assessment 67

Note

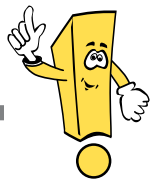

Important!

This Self-Study Program provides information regarding the design and function of new models.
This Self-Study Program is not a Repair Manual.

This information will not be updated.
For maintenance and repair procedures, always refer to the latest electronic service information.

Page intentionally left blank

Overview

The 3.2L and the 3.6L V6 FSI engines belong to the VR family of engines. Their reduced V-angle, compared with a traditional V-engine, gives them an extremely compact and space-saving design.

The VR engines have a long history at Volkswagen. The VR success began in 1992 with the start of production of the 2.8L VR6 engine. In 2002, the VR6 was converted to four-valve technology. In 2003 the capacity of the VR6 was increased to 3.2 liters, resulting in a power increase of up to 250 hp. Then, in 2006, the capacity was increased to 3.6 liters, resulting in a power increase of up to 280 hp.

The VR engines are highly suitable for a broad range of applications due to their compact design.

This self-study program is designed for use in the Volkswagen Group, and therefore does not address the application of the engine in a specific vehicle.

If reference is made to a particular vehicle, this is intended only as an example, to describe design, operation or to help better understand this manual.

S360_371

Overview

S360_203

The new 3.2L and 3.6L V6 FSI engines are the newest representatives of the VR engine series.

The displacement was increased to 3.2 liters or 3.6 liters, combined with the switch to the FSI technology. This yields a noticeable increase in power and torque compared with the previous engines.

The 3.6L engine has a maximum rated power of 280 hp (206 kW) and produces a maximum torque of 265 lb.fts (360 Nm).

Special Features of both Engines:

- Compact size
- FSI direct gasoline injection
- Four-valve technology with roller rocker arms
- Internal exhaust gas recirculation
- Single-piece variable-length intake manifold made of plastic
- Cast iron crankcase
- Chain drive located on the transmission side with integral drive for the high-pressure fuel pump
- Continuously variable intake and exhaust camshafts

The use of FSI direct fuel injection technology makes it possible to meet current Low Emission Vehicle (LEV2) emission standards.

Technical Data for the 3.2L V6 Engine

Construction	6 cylinders VR Engine
Displacement	193.3 cu.in (3168 cm^3)
Bore	3.4 in (86 mm)
Stroke	3.58 in (90.9 mm)
V Angle	10.6°
Valves per cylinder	4
Compression ratio	12:1
Max Output	250 hp (184 kW) @ 6250 rpm
Max Torque	243 lbs.ft (330 Nm) @ 2750-3750 rpm
Engine management	Motronic MED 9.1
Exhaust emission control	Three-way catalytic converters with O2 sensor
Emission standard	LEV2

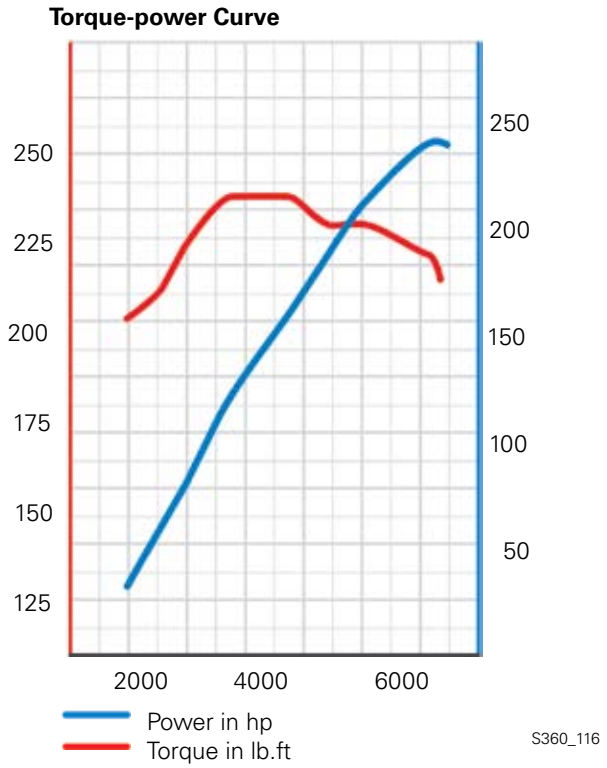

Technical Data for the 3.6L V6 FSI Engine

Construction	6 cylinders VR Engine
Displacement	219.5 cu.in (3597 cm^3)
Bore	3.5 in (89 mm)
Stroke	3.8 in (96.4 mm)
V Angle	10.6°
Valves per cylinder	4
Compression ratio	12:1
Max Output	280 hp (206 kW) @ 6200 rpm
Max Torque	265 lbs.ft (360 Nm) @ 2500-5000 rpm
Engine management	Motronic MED 9.1
Exhaust emission control	Three-way catalytic converters with O2 sensor
Emission standard	LEV2

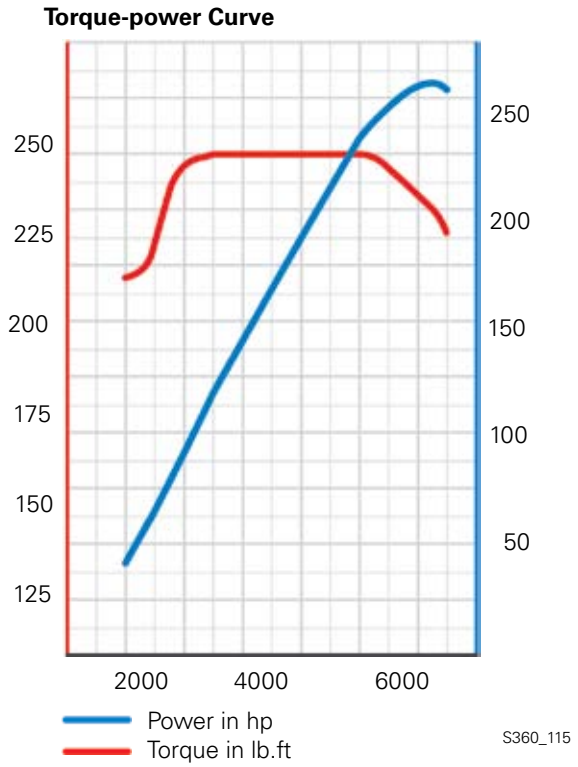

The Variable Intake Manifold

The variable intake manifold design increases low rpm torque and high rpm power by taking advantage of the self-charging or "ram effect" that exists at some engine speeds.

By "tuning" the intake manifold air duct length, engineers can produce this ram effect for a given rpm range. A manifold that has two different lengths of air ducts can produce the ram effect over a broader rpm range.

The 3.2 and 3.6-liter V6 engines use two lengths of air ducts but not in the same way as the dual path manifolds used on other engines.

Instead of using high velocity air flow in a long narrow manifold duct to ram more air into an engine at low rpm and then opening a short, large diameter duct for high rpm, the 3.2 and 3.6-liter V6 engines take advantage of the pressure wave created by the pressure differential that exists between the combustion chamber and the intake manifold.

All air enters the intake manifold plenum and torque port, then is drawn down the long intake ducts to the cylinders.

A second plenum called the performance port, which is attached to a set of short manifold ducts, joins the long intake ducts near the cylinder head. A performance port valve, similar in design to a throttle valve, separates the performance port from the short ducts.

Note that the performance port does not have any passage to the intake manifold other than through the performance port valve. It does not have access to the torque port and does not admit any more air into the cylinders than what is already drawn down the long intake ducts.

At engine speeds below 900 rpm the performance port is open for idling. The performance port valve is actuated. At engine speeds between 900 rpm and 4100 rpm, the performance port is closed and the engine produces its maximum low end torque (the performance port valve is not actuated).

At engine speeds above 4100 rpm the performance port is open (the performance port valve is actuated).

Performance Port Valve Open

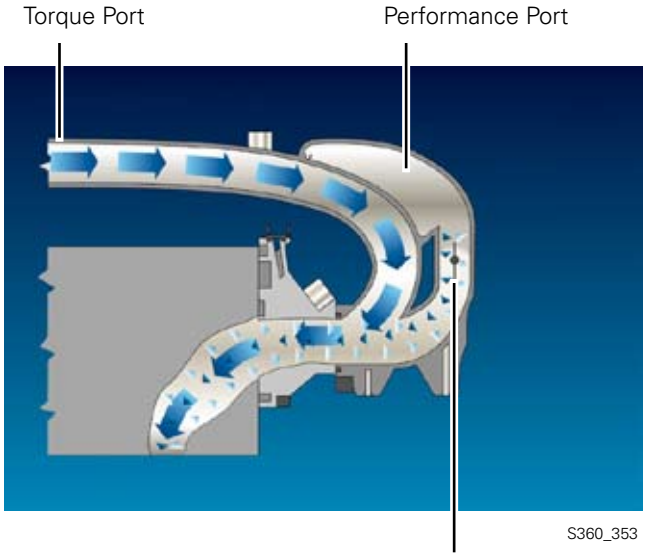

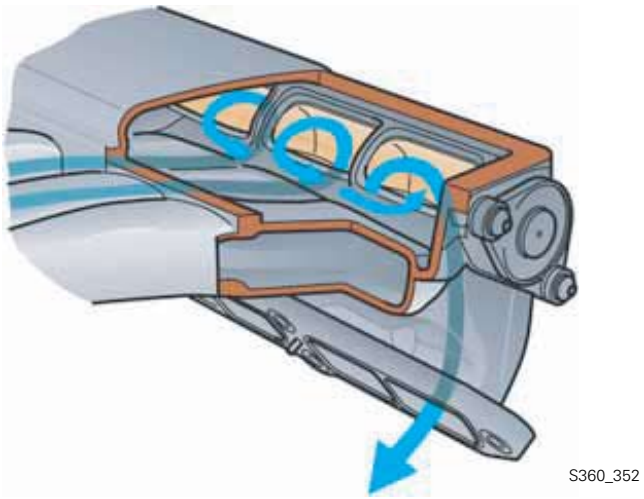

Performance Port Valve Closed

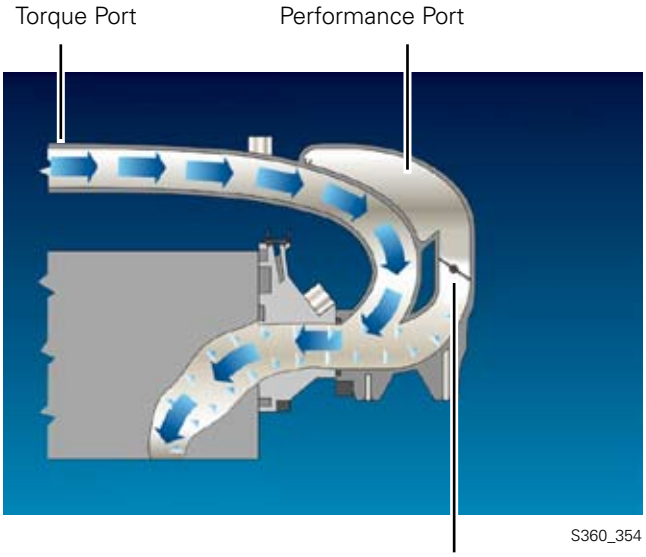

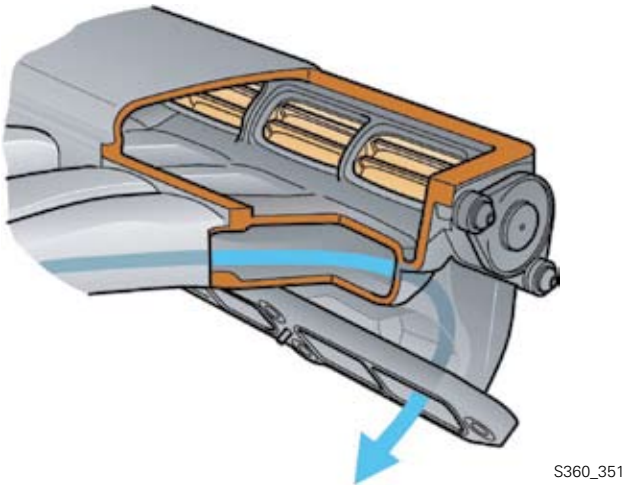

Performance Port Valve Actuation

Intake manifold change-over is engine speed dependent. The Motronic Engine Control Module J220 activates the Intake Manifold Change-Over Valve N156, which supplies vacuum to the vacuum solenoid that operates the performance port valve.

A vacuum reservoir with non-return valve is used to store a vacuum supply for the performance valve operation. This is necessary as manifold vacuum may be insufficient to actuate the vacuum solenoid at high engine speeds.

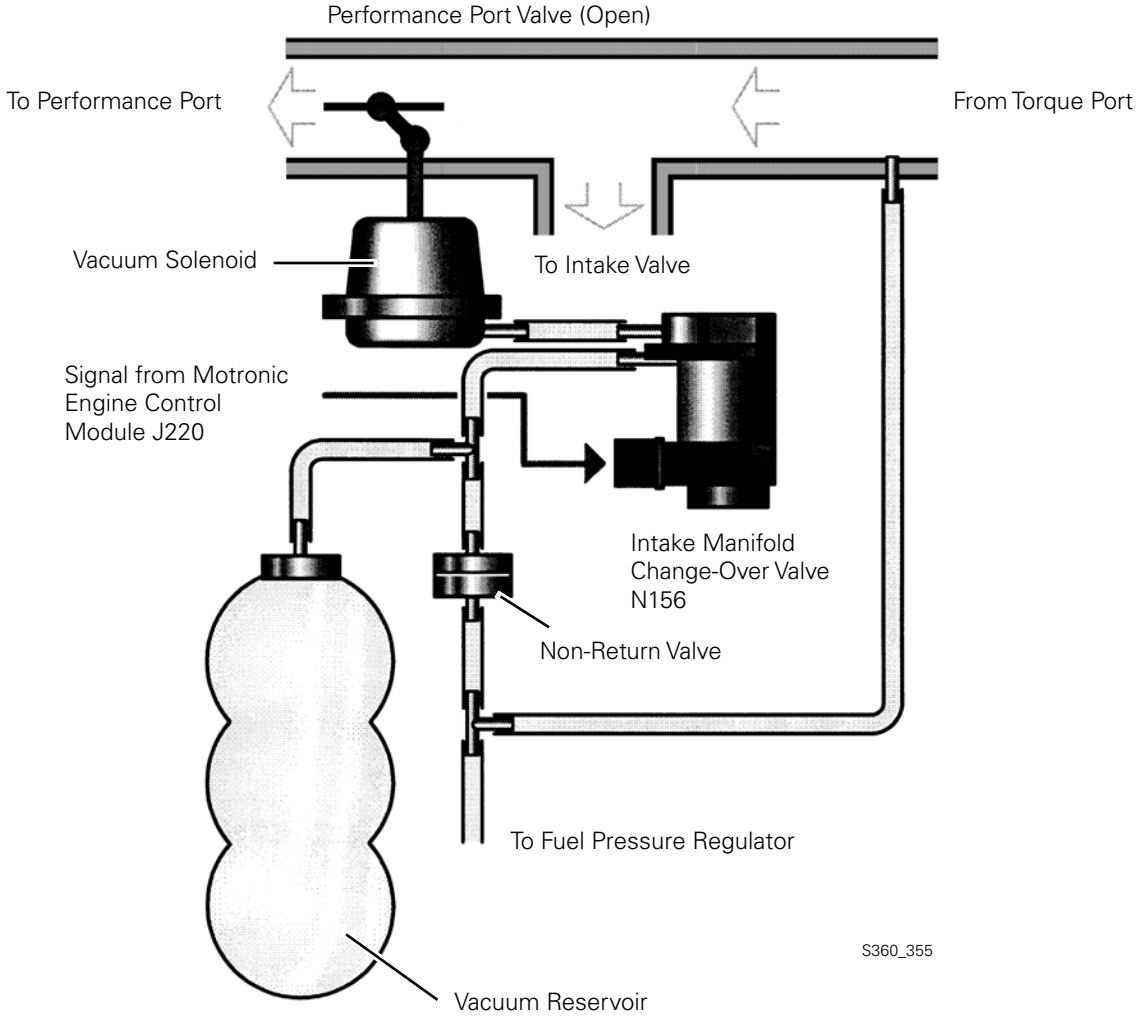

Principles of Variable Resonance Intake Manifold Operation

After combustion has taken place in a cylinder, there is a pressure differential between the cylinder combustion chamber and the intake manifold. When the intake valves open, an intake wave forms in the intake manifold. This low pressure wave moves from the intake valve ports toward the torque port at the speed of sound.

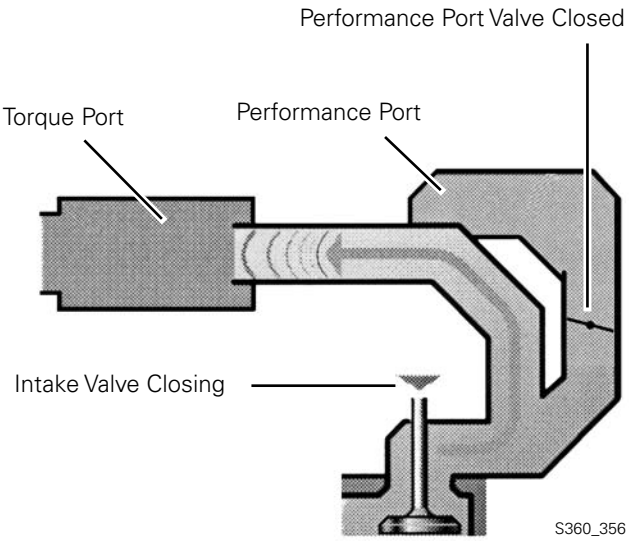

The open end of the intake duct at the torque port has the same effect on the intake wave as a solid wall has on a ball. The wave is reflected back toward the intake valve ports in the form of a high pressure wave.

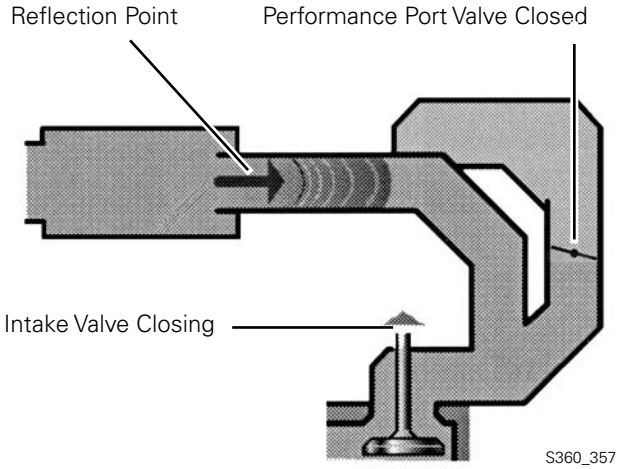

Basics

At an optimal intake manifold length, the maximum pressure reaches the intake valve ports shortly before the valves close. By this time the piston has started back up the cylinder, compressing the air/fuel mixture.

The pressure wave forces more air into the cylinder against this rising compression pressure, filling the cylinder with more air/ fuel mixture than would be possible from just the piston moving downward on the intake stroke alone. This adds to what is called self-charging or "ram effect."

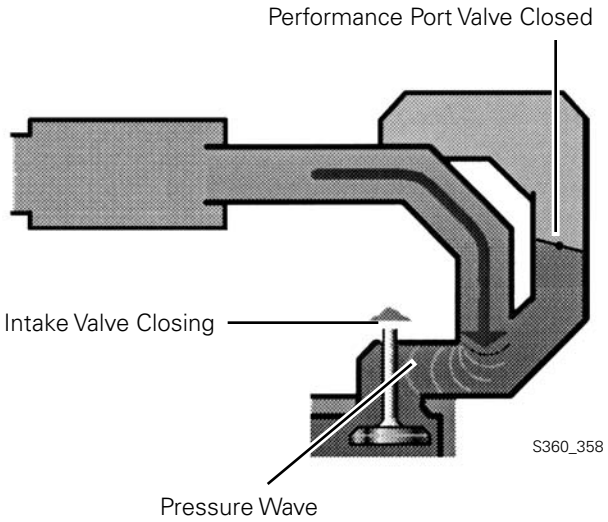

As engine speed increases, the high pressure wave will have less time to reach the inlet port. Because the pressure wave is only able to move at the speed of sound, it will reach the intake valve ports too late. The valves will already be closed, and the "ram effect" cannot take place. This problem can be solved by shortening the intake manifold.

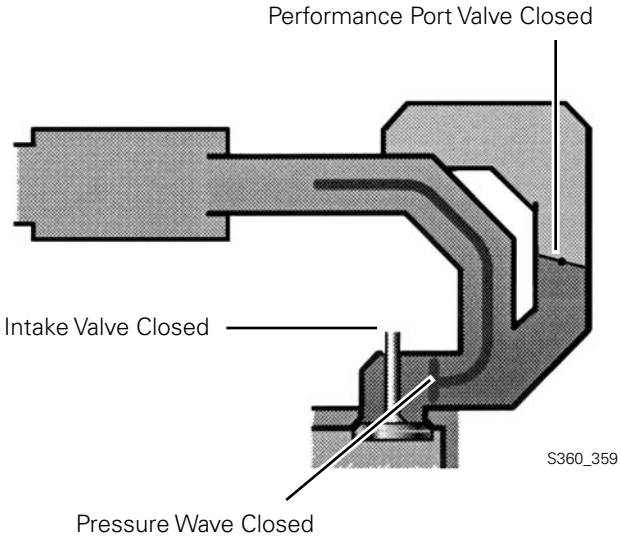

In the 3.2 and 3.6-liter V6 engines, the performance port valve turns to the performance position at engine speeds below 900 rpm and above 4100 rpm. This opens up the path to the performance port. The performance port is designed so that the intake and pressure waves will have a shorter path back to the intake valve ports.

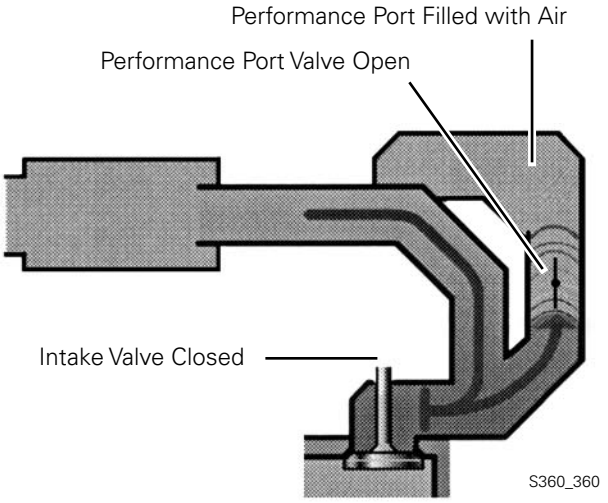

The performance port is filled with air when the intake valve ports are closed.

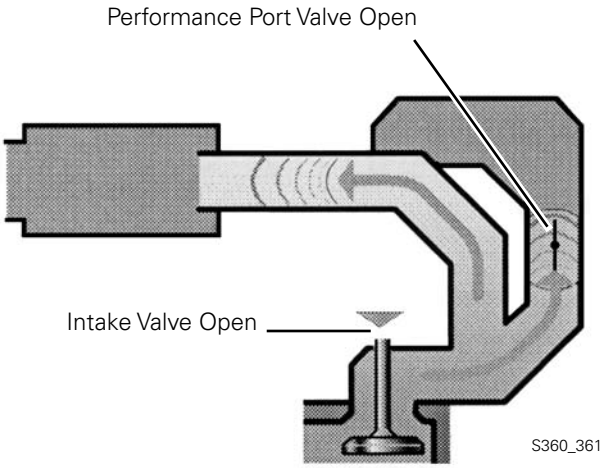

When the intake valves open, the intake wave moves up both manifold intake ducts toward the torque port and the performance port at the same speed.

Because the distance it must travel is shorter, the intake wave reaches the open end of the intake duct at the performance port before it reaches the open end of the intake duct at the torque port.

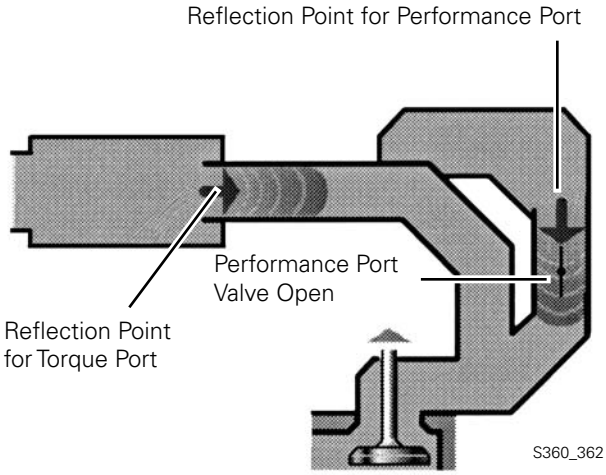

The performance port pressure wave is reflected back toward the intake valve ports, and that air is forced into the combustion chamber before the intake valves close.

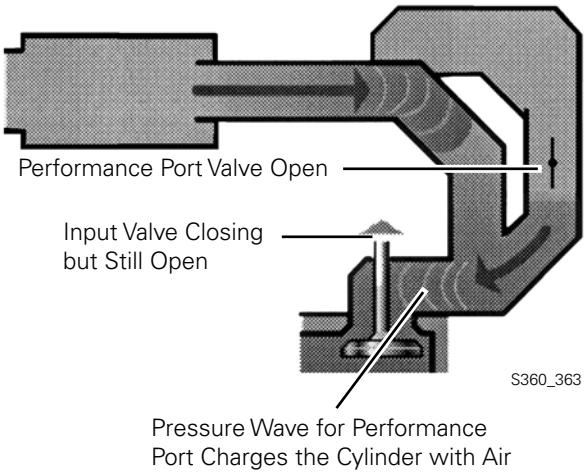

The pressure wave arriving too late from the torque port is reflected by the closed intake valves and pushes its air charge up the intake duct, filling the performance port in preparation for the next cycle.

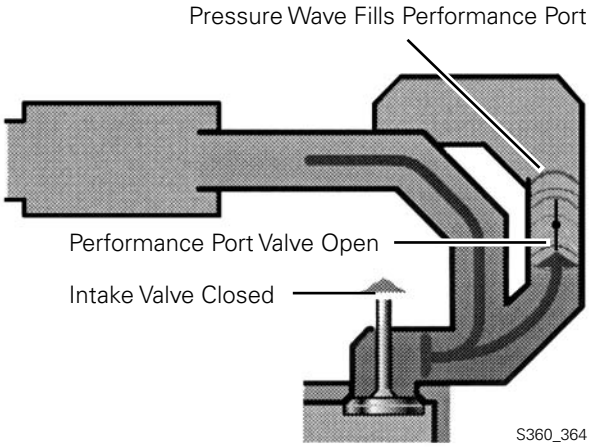

The Air Mass Meter with Reverse Flow Recognition

To guarantee optimal mixture composition and lower fuel consumption, the engine management system needs to know exactly how much air the engine intakes. The air mass meter supplies this information.

The opening and closing actions of the valves cause the air mass inside the intake manifold to flow in reverse. The hot-film air mass meter with reverse flow recognition detects reverse flow of the air mass and makes allowance for this in the signal it sends to the engine control unit. Thus, the air mass is metered very accurately.

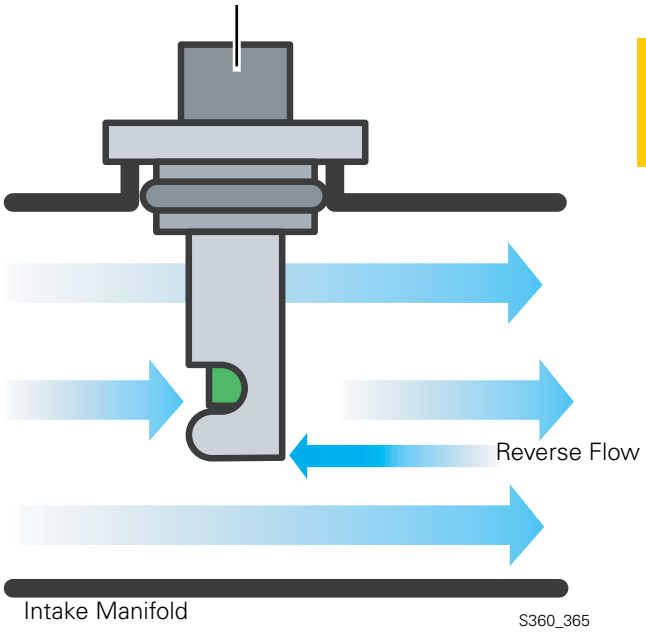

Design

The electronic circuit and the sensor element of the air mass meter are accommodated in a compact plastic housing.

Located at the lower end of the housing is a metering duct into which the sensor element projects. The metering duct extracts a partial flow from the air stream inside the intake manifold and guides this partial flow past the sensor element. The sensor element measures the intake and reverse air mass flows in the partial air flow. The resulting signal for the air mass measurement is processed in the electronic circuit and sent to the engine control unit.

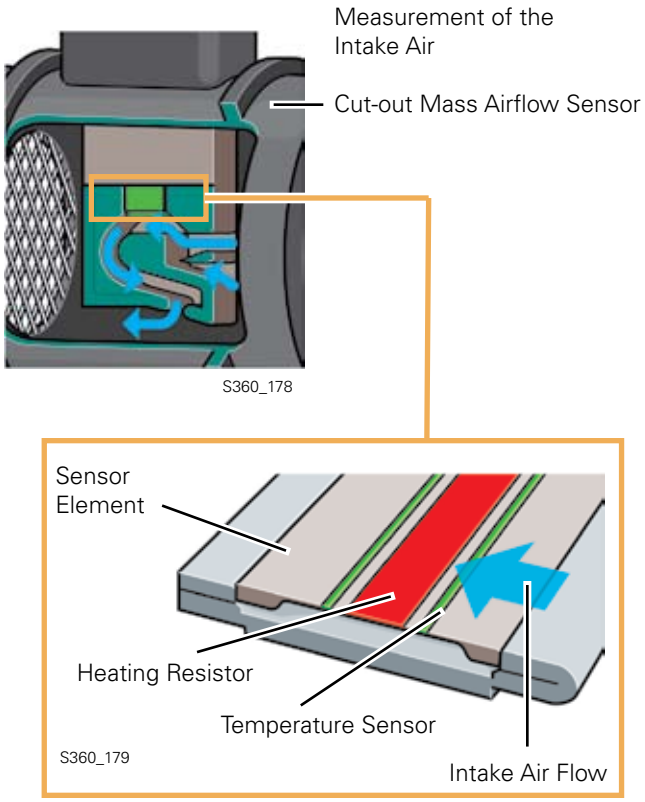

Functional Principle

Two temperature sensors (T1 and T2) and a heating element are mounted on the sensor.

The sensors and heating element are attached to a glass membrane. Glass is used because of its poor thermal conductivity. This prevents heat which the heating element radiates from reaching the sensors through the glass membrane. This can result in measurement errors.

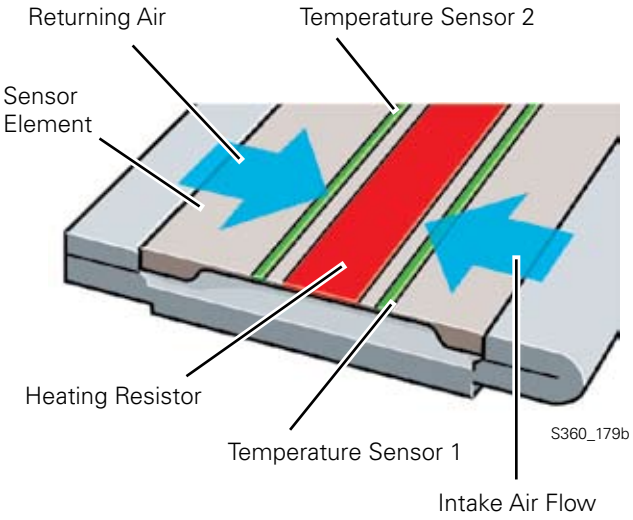

Temperature Sensor

The heating element warms up the air above the glass membrane. The two sensors register the same air temperature, since the heat radiates uniformly without air flow and the sensors are equidistant from the heating element.

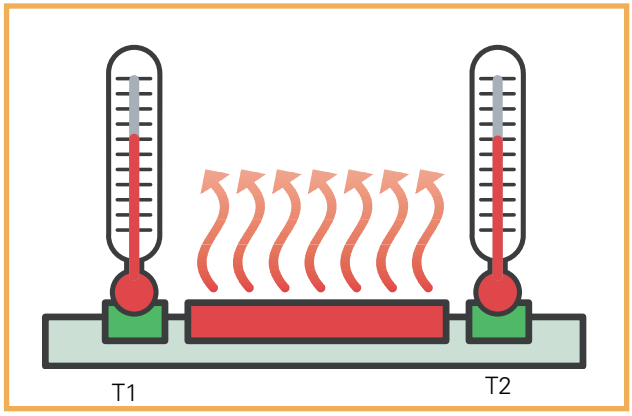

S360_366

Induced Air Mass Recognition

In the intake cycle, an air stream is ducted from T1 to T2 via the sensor element. The air cools sensor T1 down and warms up when it passes over the heating element, with the result that sensor T2 does not cool down as much as T1.

The temperature of T1 is then lower than that of T2. This temperature difference sends a signal to the electronic circuit that air induction has occurred.

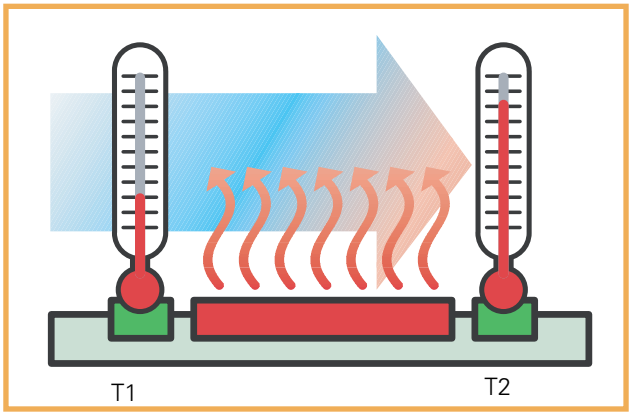

S360_367

Reverse Air Mass Flow Recognition

If the air flows over the sensor element in the opposite direction, T2 will be cooled down more than T1. From this, the electric circuit recognizes reverse flow of the air mass. It subtracts the reverse air mass flow from the intake air mass and signals the result to the engine control unit.

The engine control unit then obtains an electrical signal: it indicates the actual induced air mass and is able to meter the injected fuel quantity more accurately.

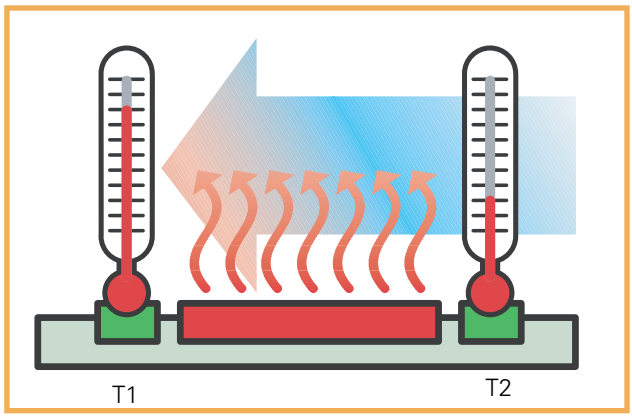

S360_368

Notes

The Cylinder Block

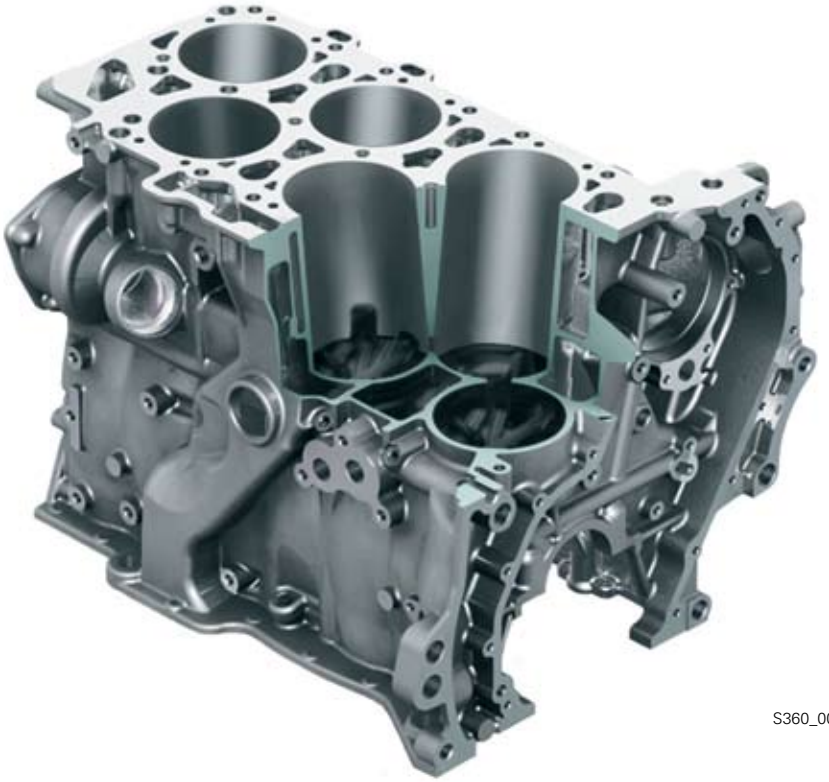

S360_004

The cylinder block has been significantly redesigned compared with the 3.2L manifold injection engine.

The goal was to obtain a displacement of 3.6 liters without changing the exterior dimensions of the engine. This was achieved by changing the V-angle and the offset.

Both FSI engines, the 3.2L and the 3.6L, have the new cylinder block. It is made of cast iron with lamellar graphite.

Further innovations compared with the 3.2L manifold injection engine include:

- Oil pump integral with the cylinder block
- Better oil return from the cylinder block to the oil pan
- Improved cylinder block rigidity, while reducing weight at the same time
- Volume of coolant in the cylinder block reduced by 0.7 liter, allowing the coolant to heat up faster.

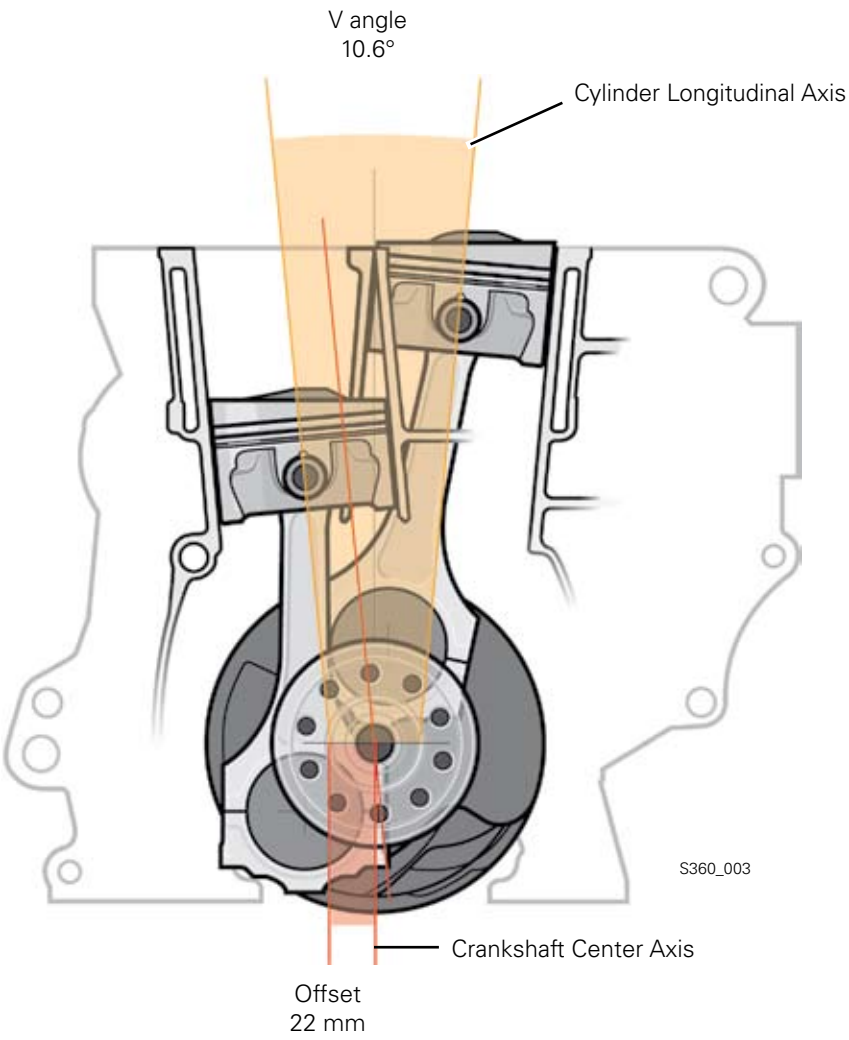

The V-angle

The V-angle of the cylinder block is 10.6°.

By changing the V-angle from 15° to 10.6°, it was possible to provide the necessary cylinder wall thickness without changing the dimensions of the engine.

Offset

By reducing the V-angle, the cylinder longitudinal axis moves outward relative to the bottom of the crankshaft.

The distance between the cylinder longitudinal axis and the crankshaft center axis is the Offset.

The Offset is increased from 12.5 mm to 22 mm compared with the manifold injection engine.

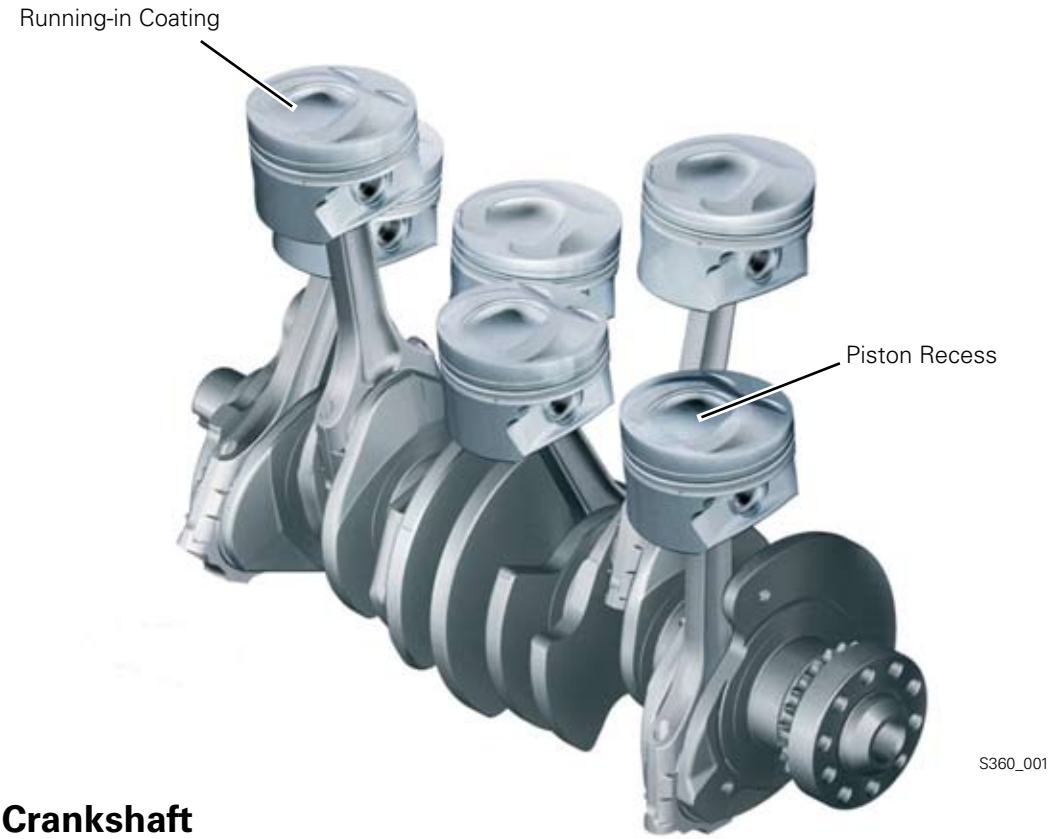

The Crankshaft

It is made of cast iron and has 7 bearings, as in the 3.2L manifold injection engine.

The Pistons

The pistons are recessed and are made of aluminum alloy. In order to improve their break-in properties, they have a graphite coating.

The pistons are different for the cylinder bank 1 and the cylinder bank 2. They differ in the arrangement of the valve pockets and the combustion chamber recess.

The location and design of the piston recess generates a swirling motion of the injected fuel and mixes it with the intake air.

The Connecting Rods

The connecting rods are not cast but milled. The connecting rod eye is of a trapezoidal design. The connecting rod bearings are molybdenum coated. This provides good running-in properties and high load capacity

The Cylinder Head

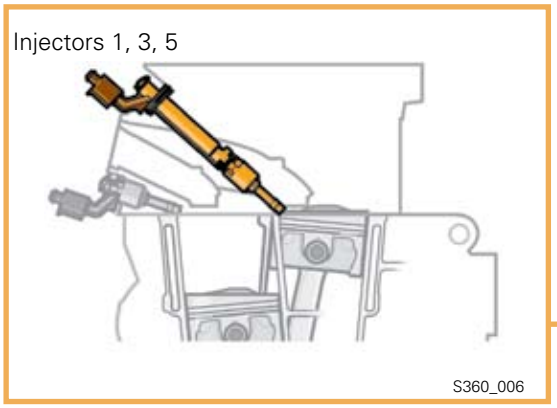

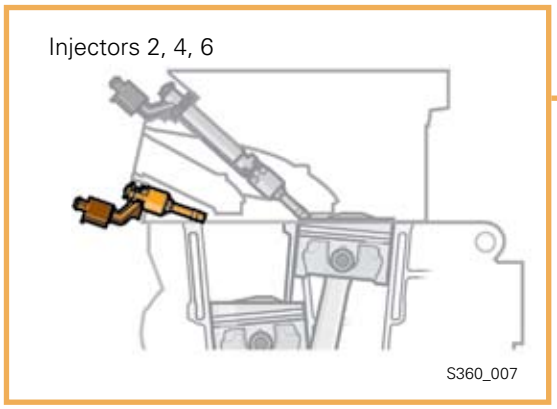

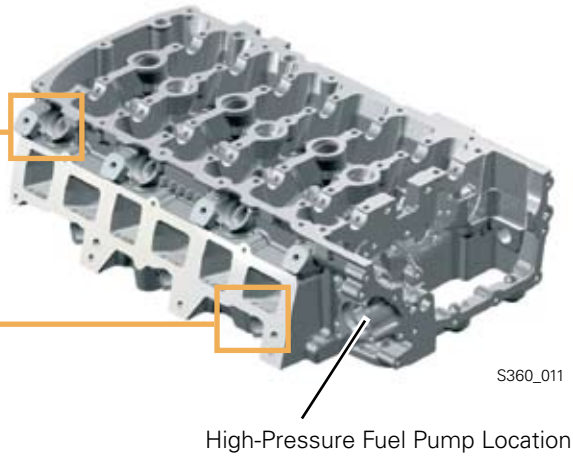

The cylinder head is made of an aluminum-silicon-copper alloy and is identical for both engines. It is a new design as a result of the direct fuel injection.

The cylinder head has been lengthened to accommodate the chain drive and to strengthen the high-pressure fuel pump mounting location.

The fuel injectors for both cylinder banks are located on the intake side of the cylinder head.

Fuel injectors of two different lengths are required because of the two different positions for the fuel injectors.

The fuel injector bores for cylinders 1, 3 and 5 are located above the intake manifold flange. The fuel injectors for cylinders 2, 4 and 6 are installed below the intake manifold flange.

As a result of this layout, the fuel injectors for cylinders 1, 3 and 5 pass through the cylinder head intake manifold.

In order to compensate for the effect of the fuel injectors on the airflow characteristics in the intake manifold, the valve spacing for all cylinders has been increased from 34.5 mm to 36.5 mm. This reduces the change in airflow direction resulting from the fuel injectors when filling the cylinders.

Camshaft Adjustment

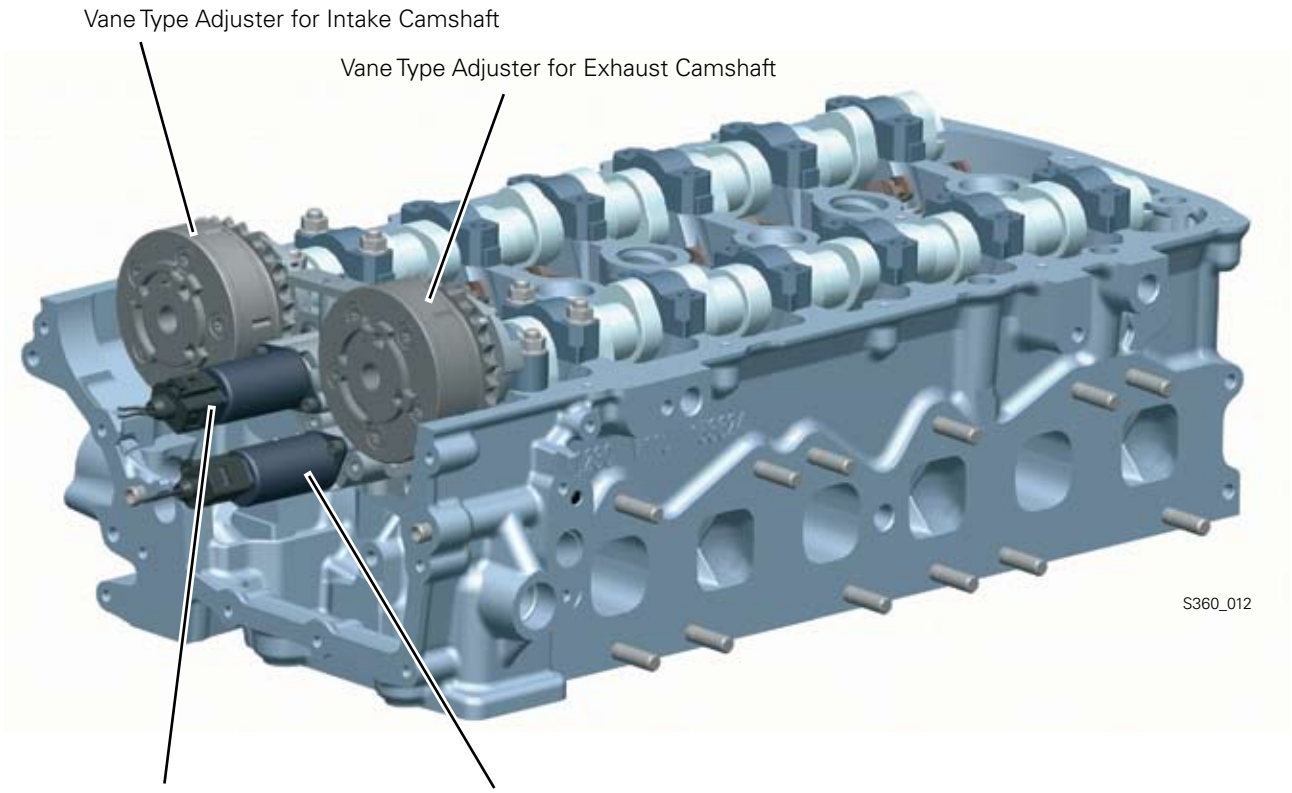

By adjusting the camshafts, power and torque can be increased, fuel consumption can be improved and emissions reduced, depending on the load characteristics of the engine.

The camshafts are adjusted by two vane type adjusters. Both camshafts can be adjusted continuously in the direction of early valve opening and late valve opening.

To adjust the camshafts, the Engine Control Module (ECM) actuates the solenoids:

- N205 Camshaft Adjustment Valve 1 and
- N318 Camshaft Adjustment Valve 1 (exhaust).

Maximum adjustment of the camshafts:

- Intake camshaft 52° from the crankshaft angle and
- Exhaust camshaft 42° from the crankshaft angle.

Both camshaft adjusters are adjusted by two valves with the assistance of the engine oil pressure.

Adjusting both camshafts enables a maximum valve overlap of 42° crankshaft angle. The valve overlap allows for internal exhaust gas recirculation.

Internal Exhaust Gas Recirculation

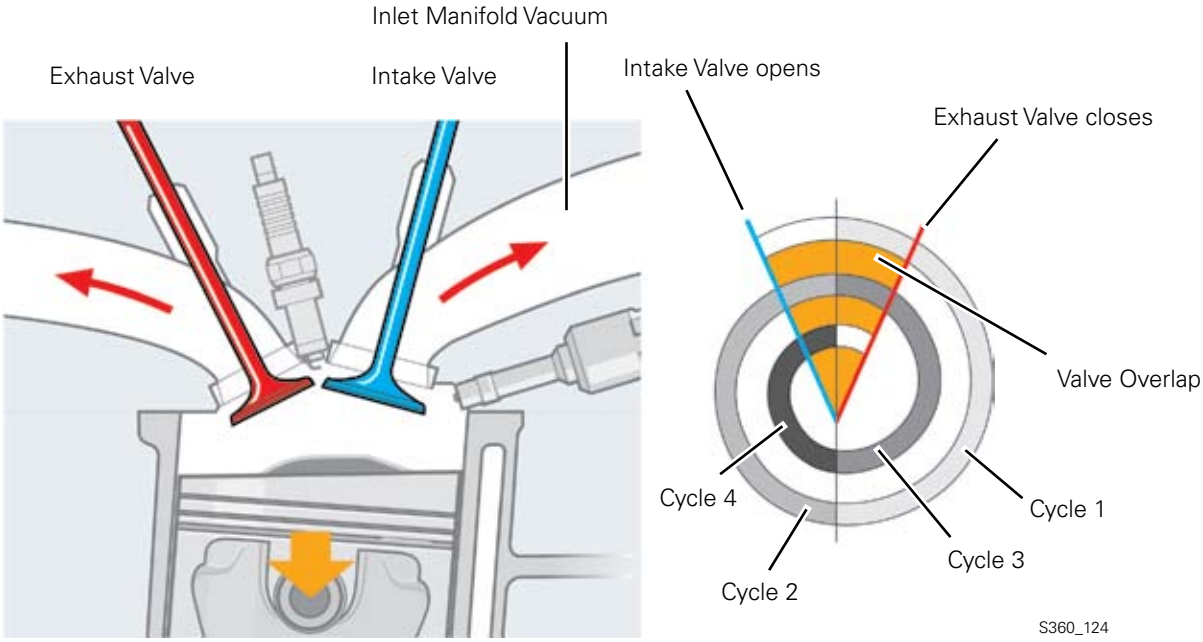

Internal exhaust gas recirculation counteracts the formation of nitrous oxides (NOx).

Just as with external exhaust gas recirculation, the reduced formation of NOx is based on lowering combustion temperature by introducing combustion gases.

The presence of combustion gases in the fresh fuel-air mixture produces a slight oxygen deficit. Combustion is not as hot as with an excess of oxygen.

Nitrous oxides are formed in greater concentrations under relatively high combustion temperatures.

By reducing combustion temperature in the engine and with the lack of oxygen, the formation of NOx is reduced.

Operation

During the exhaust stroke, the intake and the exhaust valves are both open simultaneously. As a result of the high intake manifold vacuum, some of the combustion gases are drawn out of the combustion chamber back into the intake manifold and swirled into the combustion chamber with the next induction stroke for the next combustion cycle.

Benefits of the internal exhaust gas recirculation:

- Improved fuel consumption due to reduced gas exchange
- Partial load range expanded with exhaust gas recirculation
- Smoother idle
- Exhaust gas recirculation possible even with a cold engine

Crankcase Ventilation

It prevents hydrocarbon-enriched vapors (blow-by gases) from escaping from the crankcase into the atmosphere. Crankcase ventilation consists of vent passages in the cylinder block and cylinder head, the cyclone oil separator and the crankcase ventilation heater.

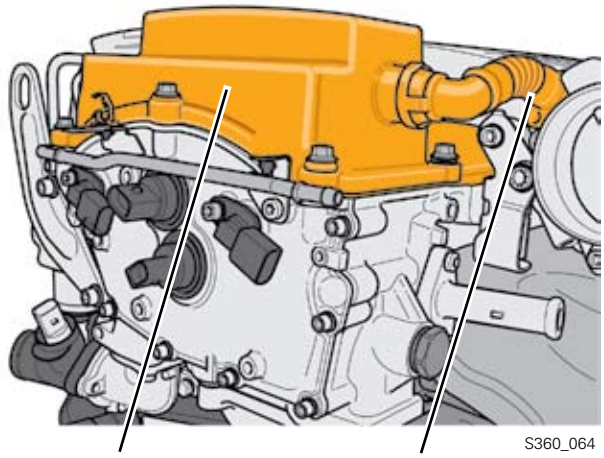

Operation

The blow-by gases in the crankcase are drawn out by intake manifold vacuum through:

- the vent ports in the cylinder block,
- the vent ports in the cylinder head,
- the cyclone oil separator and
- the crankcase ventilation heater

The blow-by gases are then rerouted into the intake manifold.

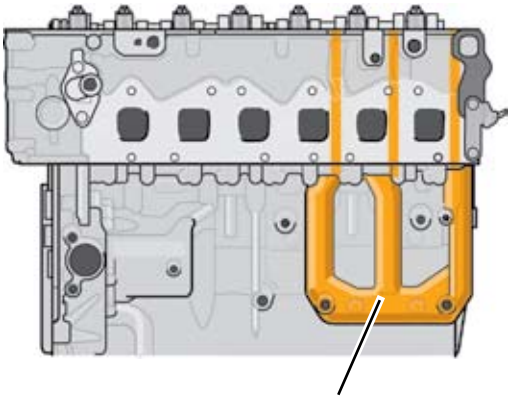

Crankcase Ventilation Heating

The heating element is installed in the flexible tube from the cyclone oil separator to the intake manifold, and prevents icing of the blow-by gases when the intake air is extremely cold.

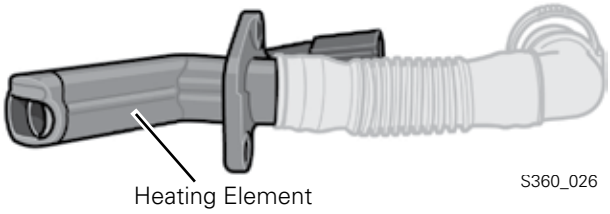

In the event of a defective pressure regulator valve, the full intake manifold vacuum and internal crankcase pressure are constantly applied to the crankcase ventilation. This causes a large amount of oil to be drawn out of the crankcase, possibly resulting in engine damage.

The Cyclone Oil Separator

The cyclone oil separator is located in the cylinder head cover. Its function is to separate oil from the blow-by gases from the crankcase and to return it to the primary oil circuit.

A pressure regulator valve limits the intake manifold vacuum from about 700 mbar to about 40 mbar.

It prevents the entire intake manifold vacuum and the internal crankcase vacuum from affecting the crankcase ventilation and drawing in engine oil or damaging seals.

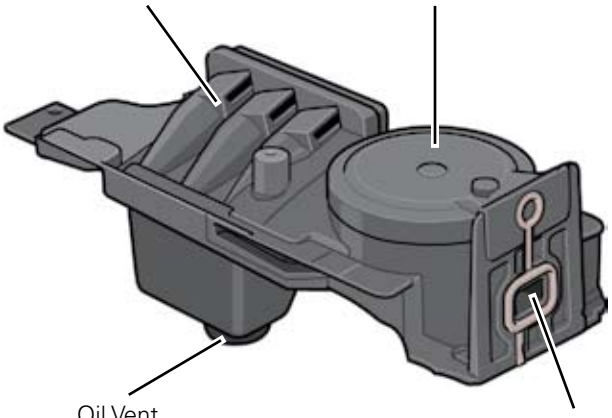

S360_058

Operation

The cyclone oil separator separates the oil from the oil vapor drawn in. It works on the principle of centrifugal separation.

Due to the cyclone design of the oil separator, the oil vapors drawn in are set into a rotating motion. The resulting centrifugal force throws the oil against the separating wall where it combines into larger drops.

While the separated oil drips into the cylinder head, the gas particles are routed into the intake manifold through a flexible tube.

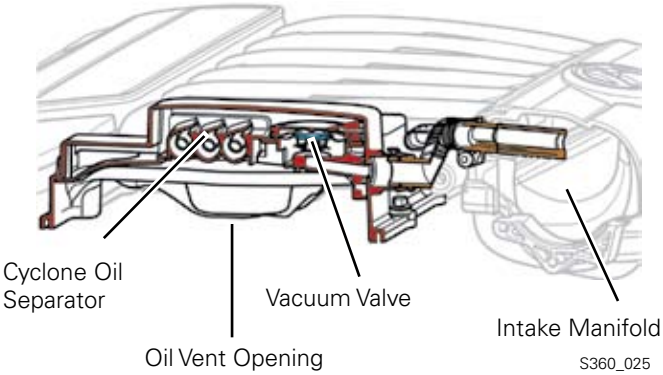

S360_025

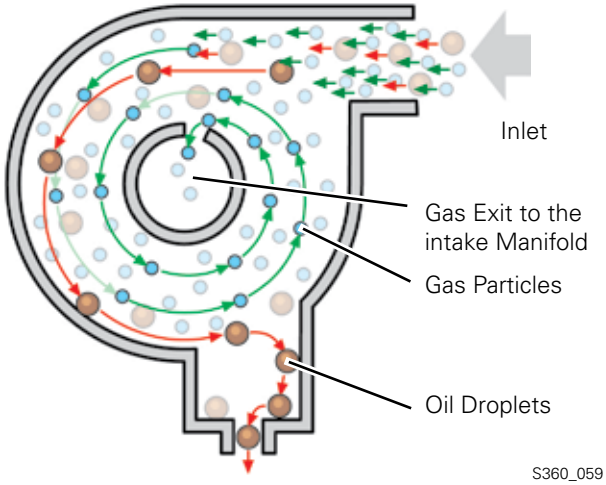

S360_059

The Intake Manifold

Both engines have a single-piece overhead intake manifold made of plastic.

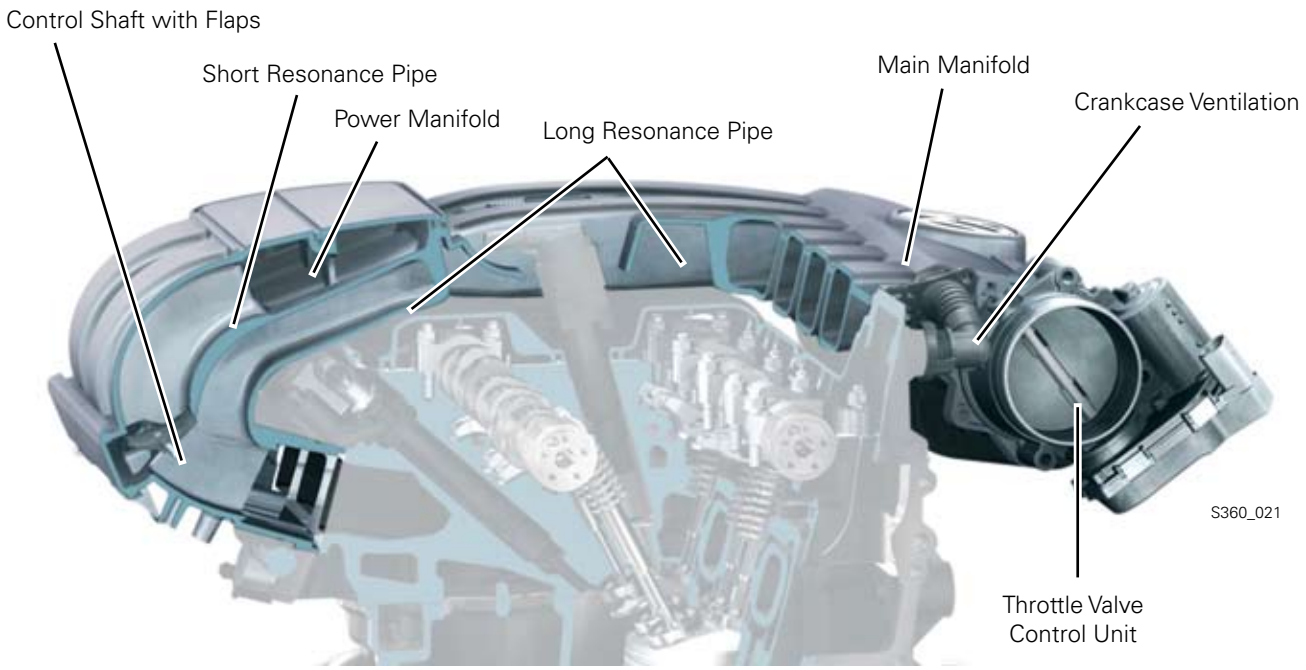

Design

The variable length intake manifold consists of:

- the main manifold
- two resonance pipes of different length per cylinder
- the control shaft
- the power manifold
- the vacuum tank
- the intake manifold valve

The two resonance pipes differ in length because a long pipe is needed to achieve high torque and a short pipe is needed to achieve high power.

The control shaft opens and closes the connection to the power manifold.

The Control Flaps

Switching between the power and torque positions is accomplished by control flaps.

The control flaps are vacuum operated by the Engine Control Module (ECM) J623 through the Intake Manifold Runner Control (IMRC) Valve N316. When current is not applied to the valve, the control flaps are open and are in the power setting.

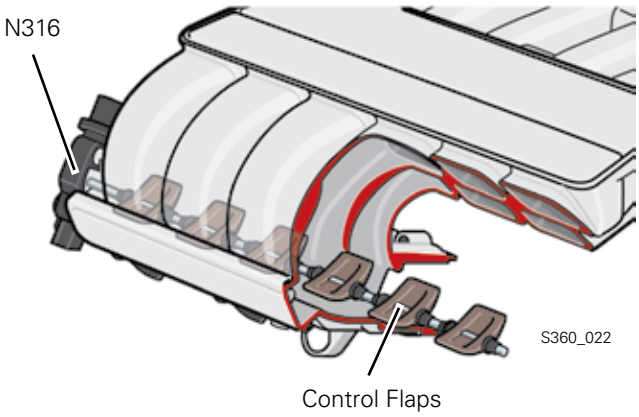

The Vacuum Tank

A vacuum tank is located within the intake manifold. A vacuum supply is maintained in this vacuum tank and will allow to actuate the control flaps.

The air from the vacuum tank is drawn through a check valve into the primary manifold, so that vacuum can build up in the vacuum tank.

If the check valve is defective, the control flaps cannot be activated.

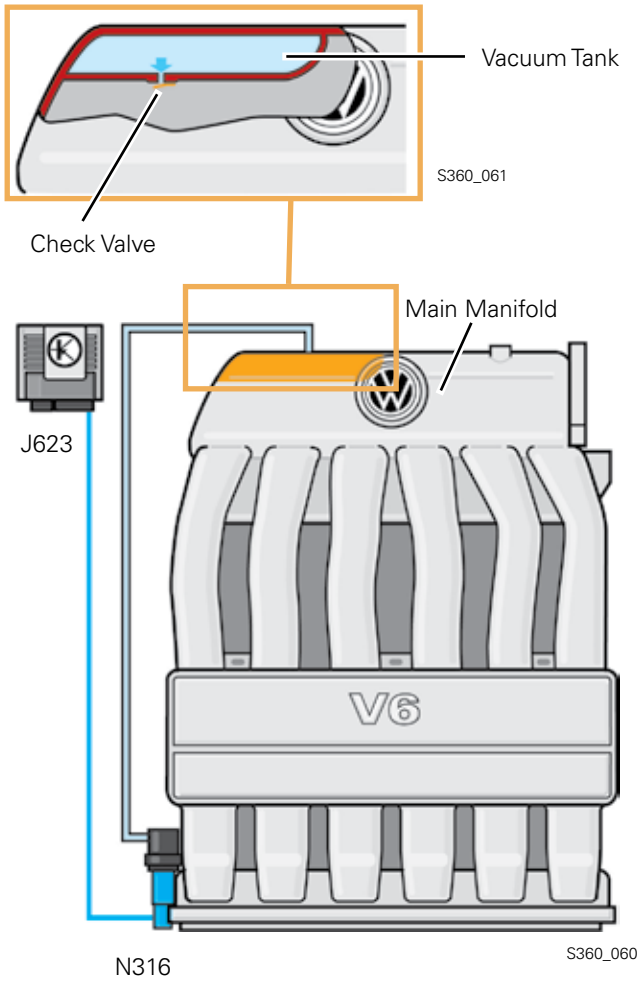

Function of the Variable Length Intake Manifold

The variable length intake manifold is designed so that a resonance is created between the timing of the valves, the intake pulses and the vibration of the air which produces an increase in pressure in the cylinder and subsequently good charging efficiency in the cylinder.

Power Setting of the Variable Intake Manifold

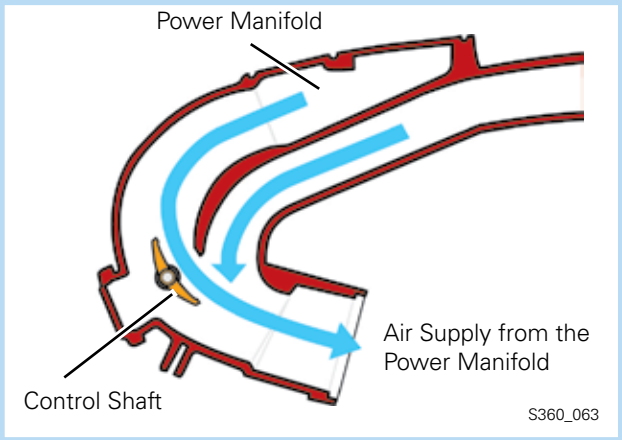

Torque Setting of the Variable Intake Manifold

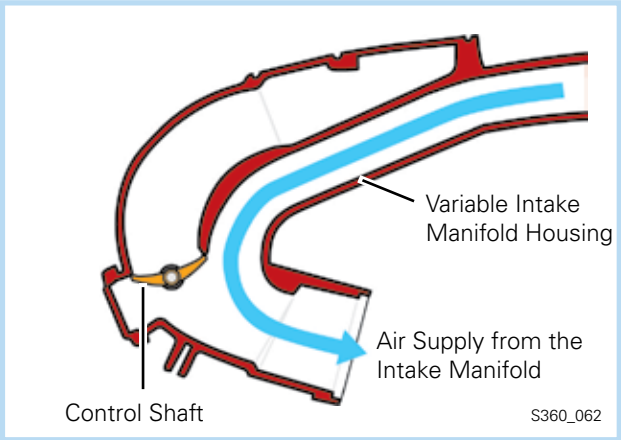

Engine Speed between 0 and about 1200 rpm

The variable length intake manifold is in the power position. Current is not applied to the intake manifold flap control valve. The vacuum wave generated at the beginning of the intake stroke is reflected at the end of the power collector in the power manifold and returns after a brief time to the intake valve as a pressure wave.

Engine Speed between about 1200 and 4000 rpm

Current is applied from the ECM to the intake manifold flap control valve. The control flaps are closed and close the power manifold. The cylinders draw air through the torque manifold directly from the main manifold.

Engine Speed above 4000 rpm

No current is applied to the intake manifold flap control valve. As a result, the intake manifold claps switch back to the power position.

The Chain Drive

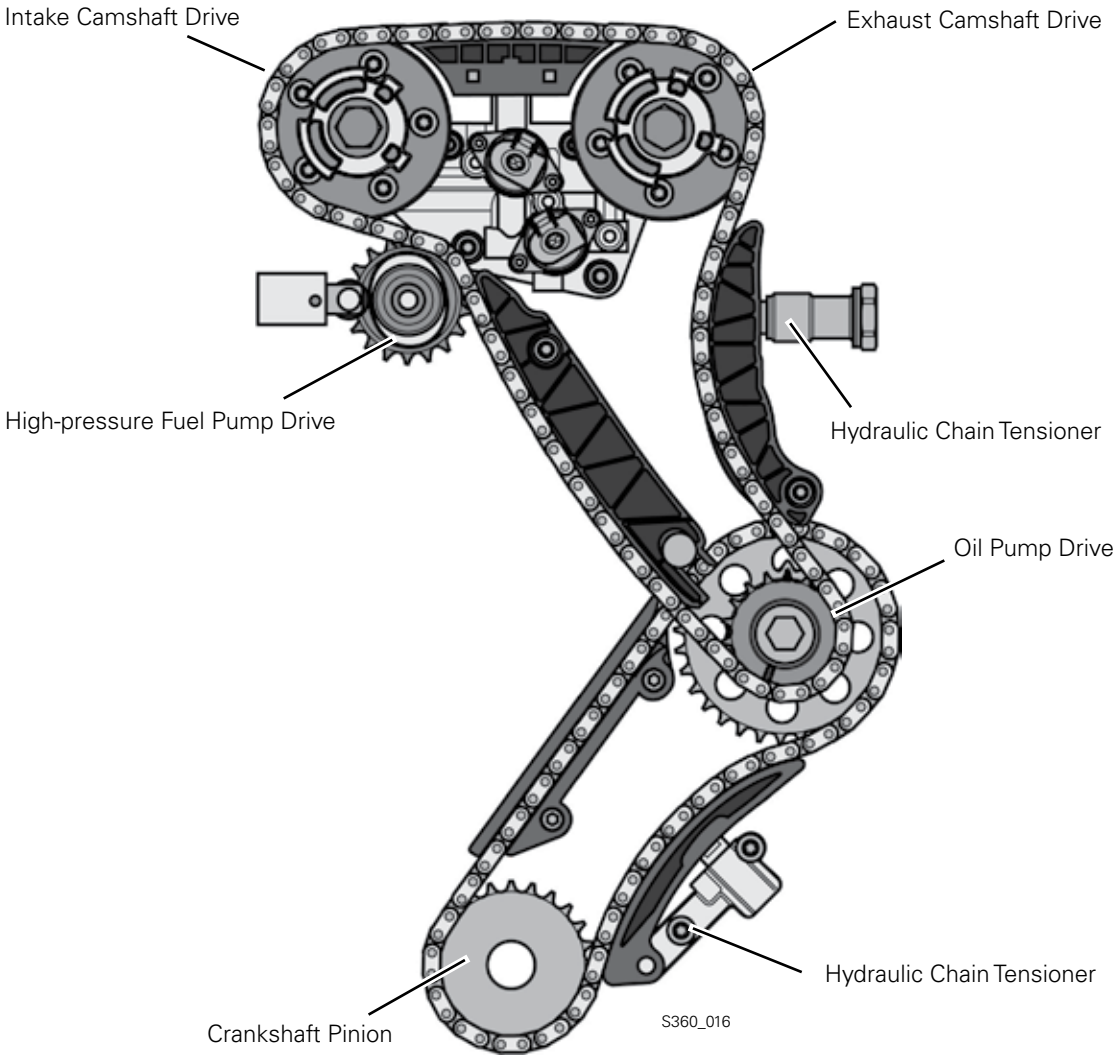

The chain drive is located on the transmission side of the engine. It consists of the primary chain and the camshaft chain.

The primary chain is driven by the crankshaft. It drives the camshaft chain and the oil pump via a sprocket wheel.

The two camshafts and the high-pressure fuel pump are driven by the camshaft chain.

Both chains are kept at the precise tension by hydraulic tensioners.

Please refer to the current Repair Manuals to adjust the valve timing. There is a new special tool T10332 for locking the high pressure-pump pinion wheel.

The Ribbed V-belt Drive

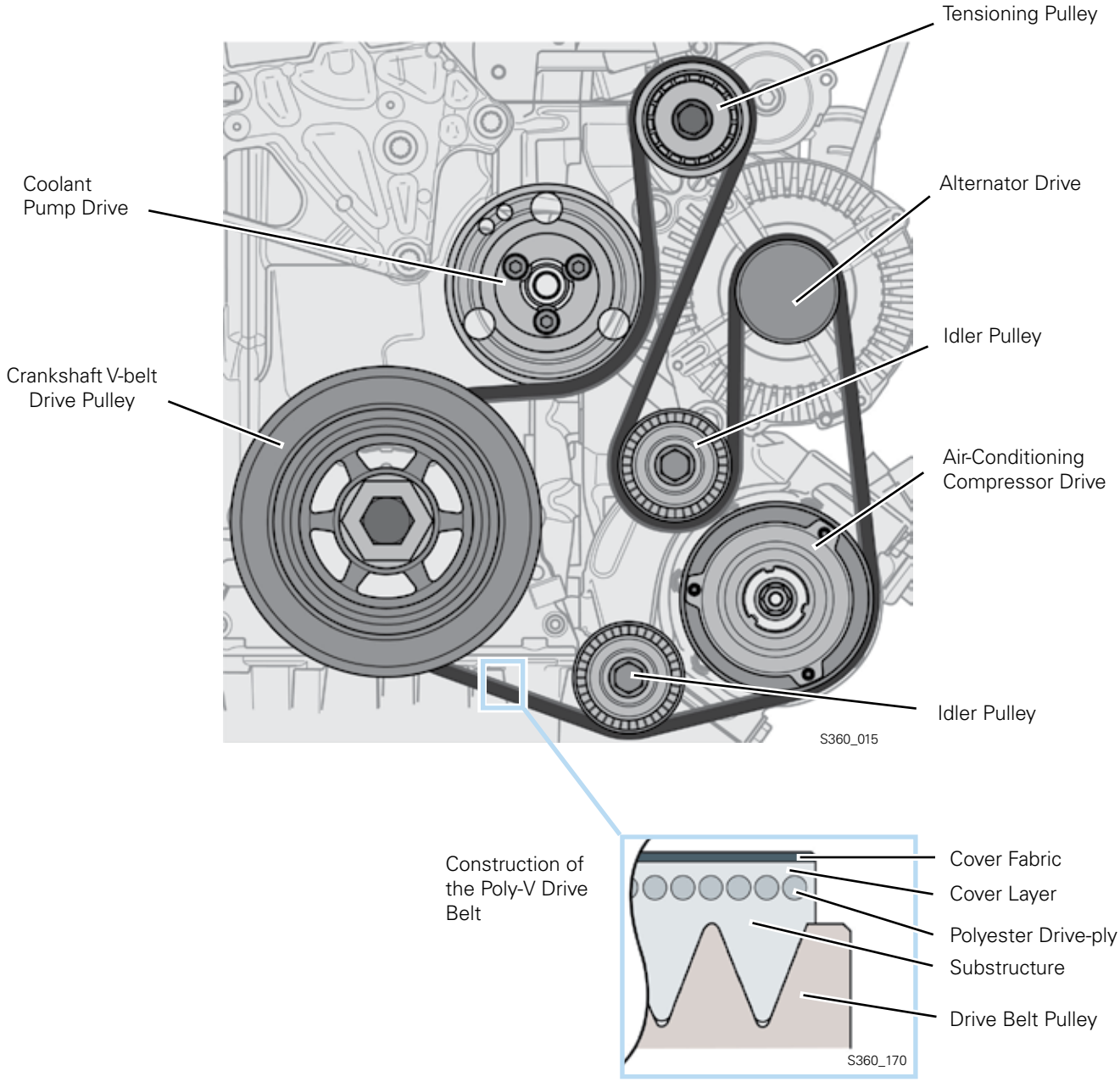

The ribbed V-belt is a single-sided poly-V belt. Even at high speed, it runs quietly and vibration-free. The belt is driven by the crankshaft through the V-belt pulley with vibration damper.

The belt drives the air-conditioning compressor, the alternator and the coolant pump.

The V-belt is always kept at the correct tension by a belt tensioner.

Oil Circulation

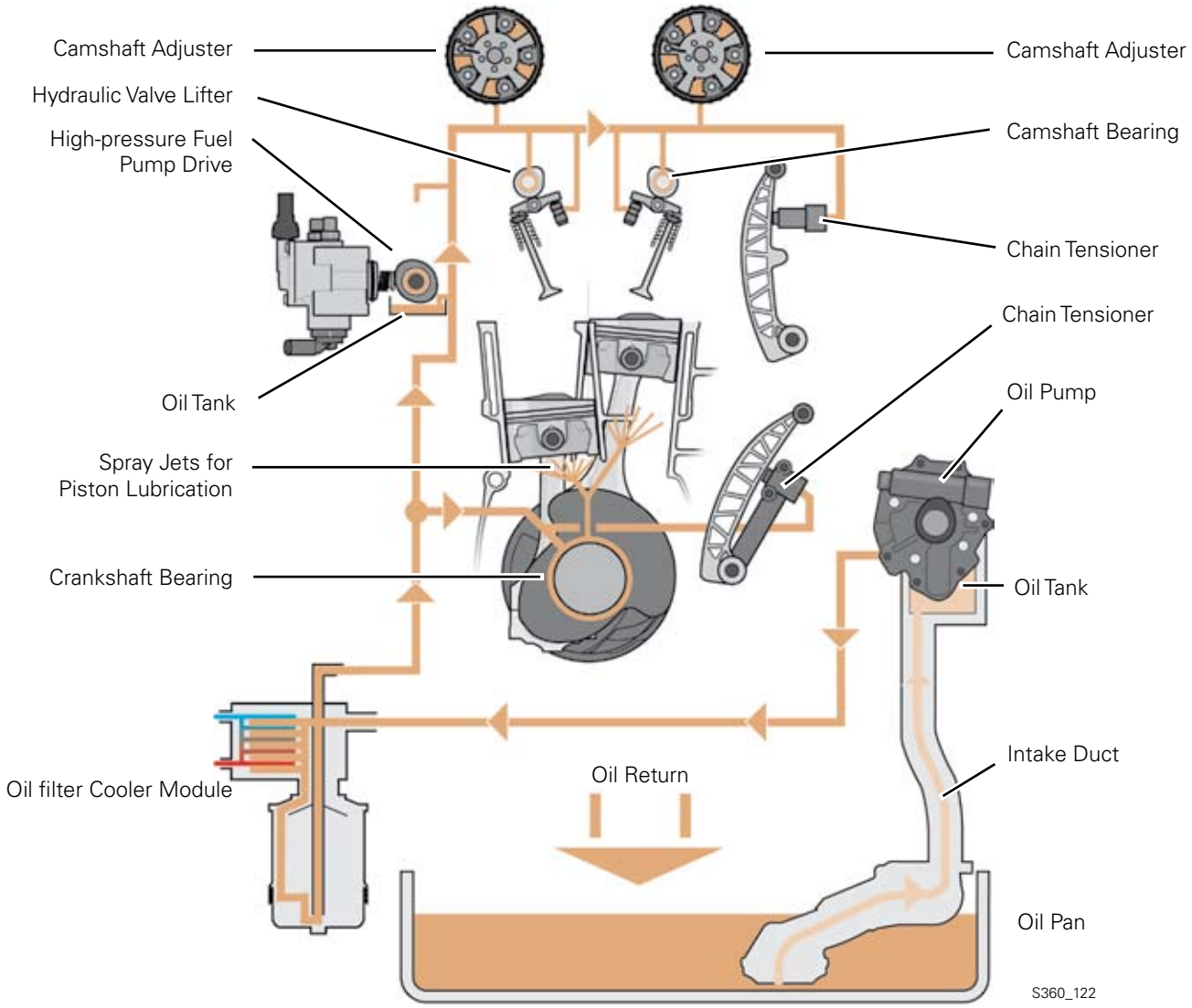

Oil pressure is generated by a self-priming duocentric oil pump. It is installed in the cylinder block and is chain driven.

The installation of the oil pump results in a longer path for the oil. This can be a disadvantage when starting the lubrication of engine components. For this reason, oil is drawn from an oil tank located behind the oil pump to ensure the initial supply of oil.

The oil pump draws oil from the oil pan and then pumps it to the oil filter-cooler module. In that module, the oil is cleaned and cooled before it is transferred to the lubrication points in the engine.

The Oil Pump with Oil Tank

The oil tank is formed in the cylinder block by a cavity behind the oil pump. Its volume is approximately 280 ml and does not drain even after the engine is switched off.

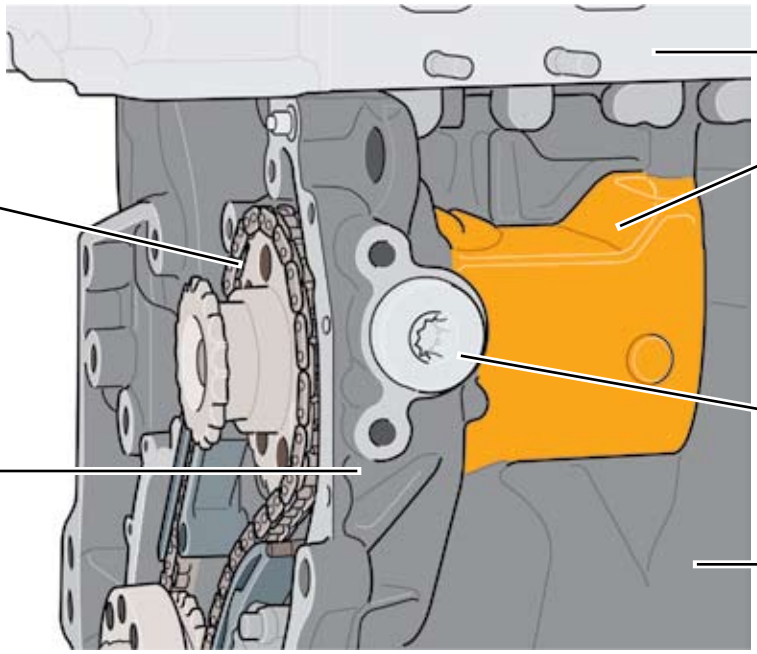

The Service Opening for the Oil Pump

The service opening provides access to the oil pump excess-pressure piston. After removing the cover bolt and a second internal bolt, the oil pump pressure piston can be removed and its condition can be inspected without having to remove the drive chain.

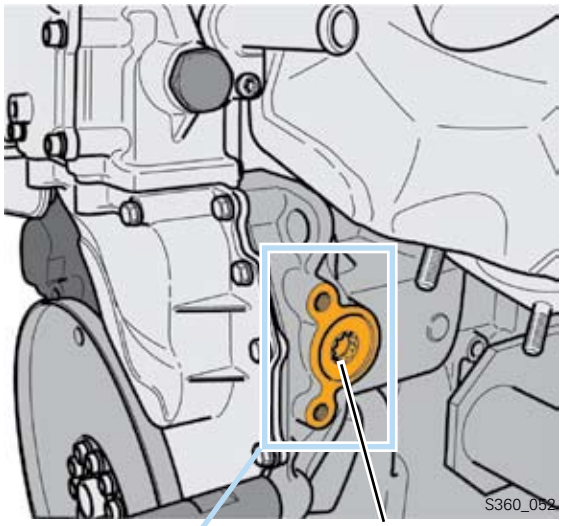

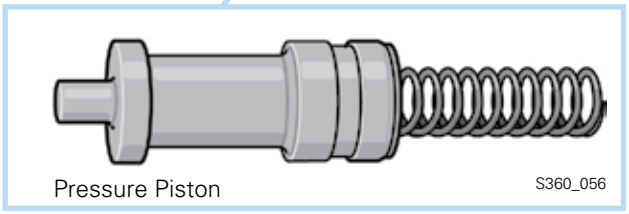

The Oil Filter Cooler Module

The oil filter cooler module is an assembly made of the oil filter, oil cooler, check valve and filter bypass valve.

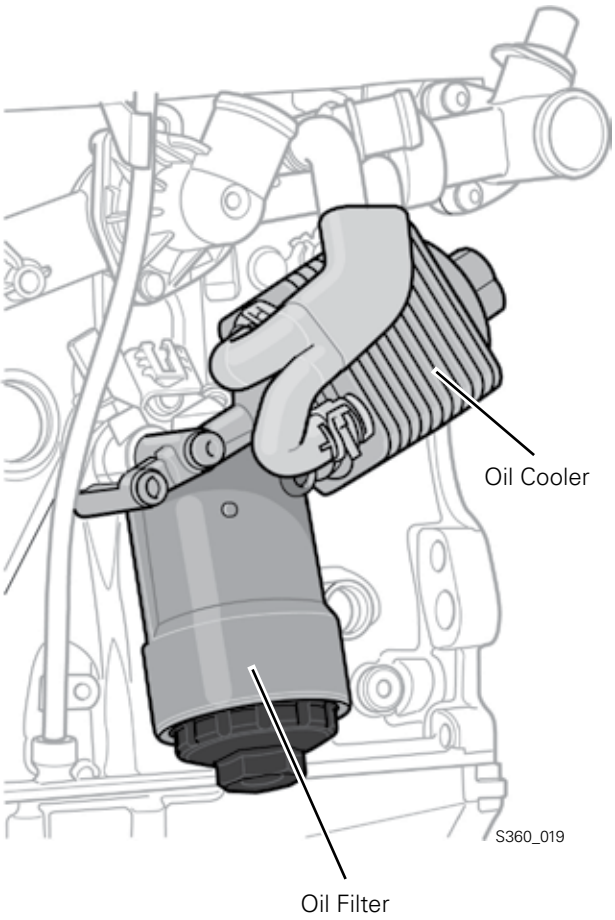

The Oil Return

The returning oil is directed through three return ducts in the cylinder head into a central oil return duct in the cylinder block.

The oil then flows into the oil pan to the bottom of the sump. In addition to the central oil return, oil is returned to the oil pan from the front of the engine through the timing chain housing.

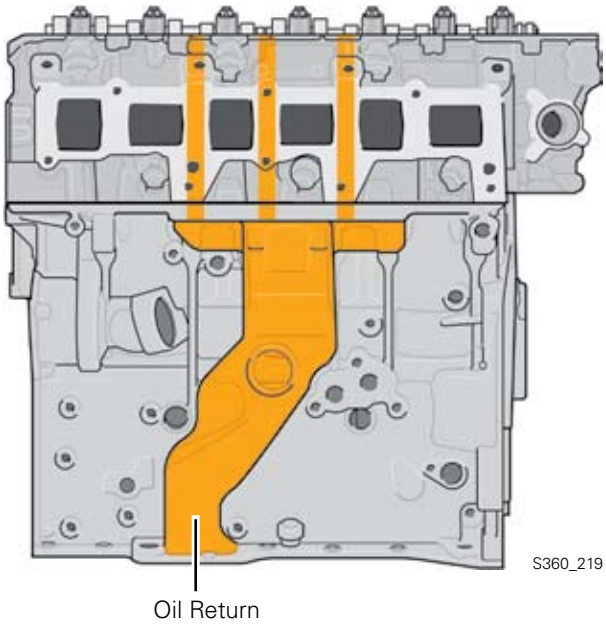

Coolant Circulation

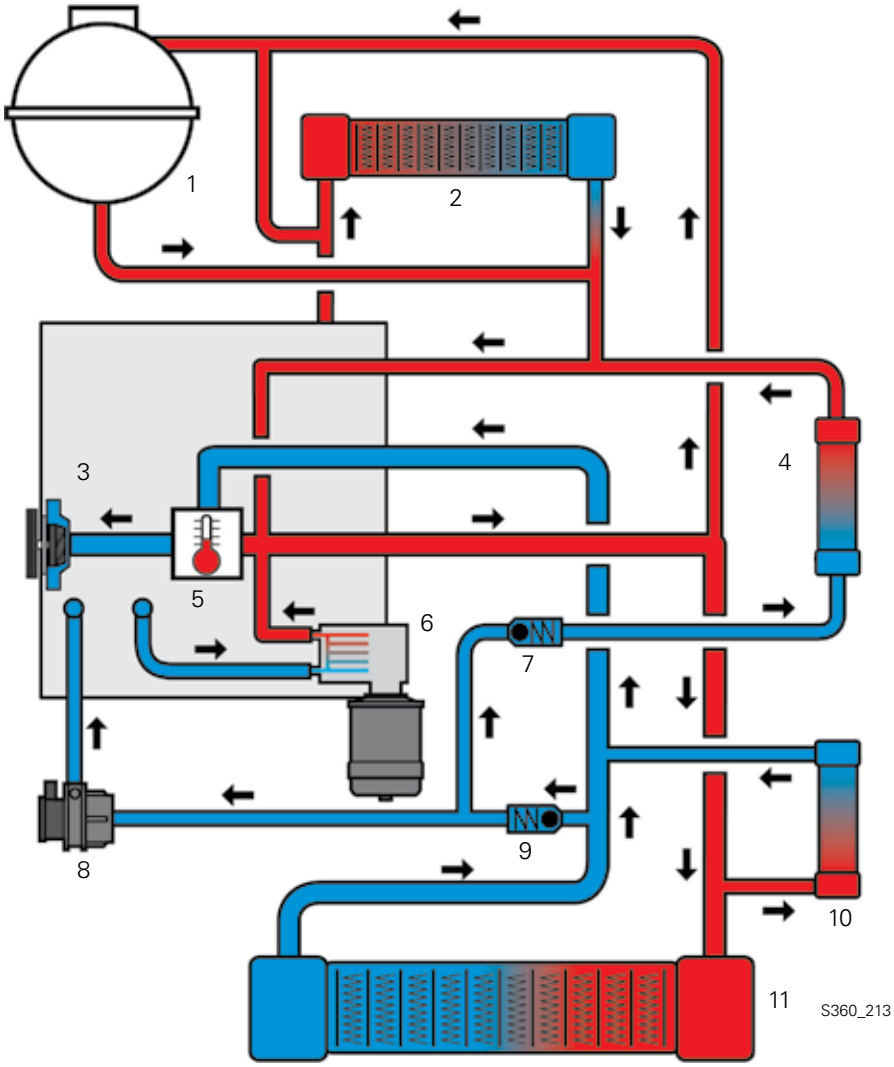

Legend

1. Coolant Tank
2. Heater Exchanger for Heating
3. Coolant Pump
4. Transmission Fluid Cooler
5. Thermostat
6. Oil Cooler
7. Check Valve
8. Recirculation Pump V55
9. Check Valve
10. Auxiliary Cooler
11. Radiator

The coolant is circulated by the mechanical coolant pump. The pump is driven by the V-belt.

There are 9 liters (2.4 gallons) of coolant in the cooling system. The total amount of coolant has been reduced by 2 liters in comparison to the 3.2L manifold injection engine. The reduced coolant allows the engine to reach operating temperature faster.

Coolant circulation is controlled by the expansion thermostat.

Depending on the vehicle, there may be an auxiliary cooler in the coolant circuit (10).

The check valves are included in the coolant circuit in order to prevent any coolant return flow.

The Recirculation Pump V55

The Recirculation Pump is an electrical pump. It is integrated into the engine coolant circuit and is actuated by the ECM based on a characteristic map. After the engine has been turned off, and with no driving airflow, the Recirculation Pump is switched on depending on coolant temperature.

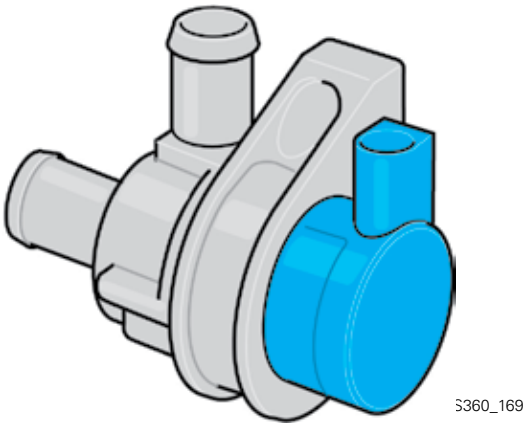

The Coolant Fan

The V6 FSI engine has two electric Coolant Fans. The Coolant Fans are activated as needed by the ECM.

The Engine Control Module (ECM) J623 signals the need for radiator cooling to the Coolant Fan Control (FC) Module J293.

Depending on the need, the Coolant Fan Control (FC) Module J293 then supplies current to one or both of the fans. Current is supplied to the Cooling Fan Control (FC) Module J293 by the Motronic Engine Control Module (ECM) Power Supply Relay J271 and by the Vehicle Electrical System Control Module J519.

The fans can also be switched on by the Coolant Fan Control (FC) Module after the engine has been turned off.

In order to turn on the fans when the engine has been turned off, the Coolant Fan Control (FC) Module has a connection to terminal 30.

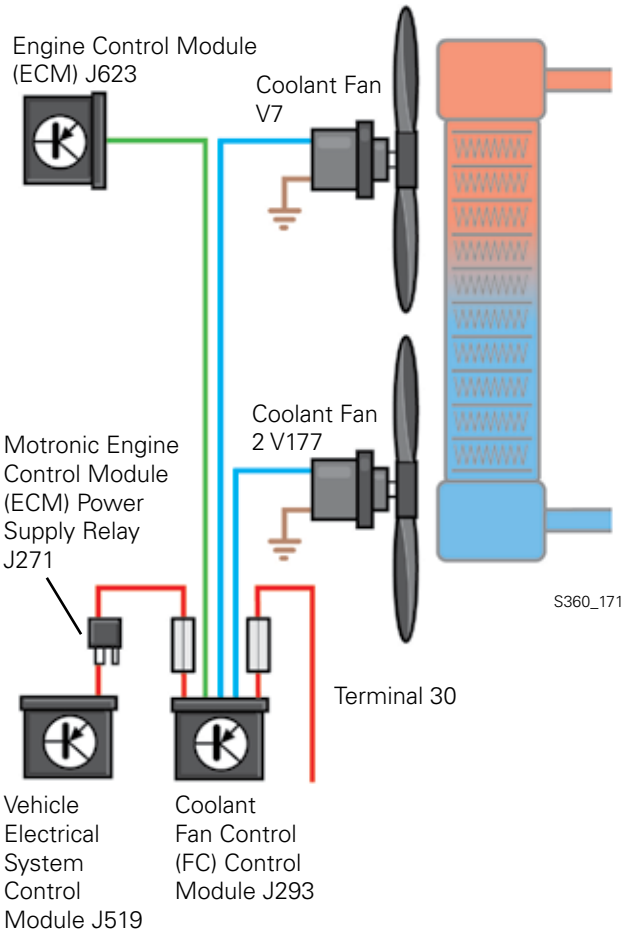

The Exhaust System

3.2-liter V6 FSI Engine

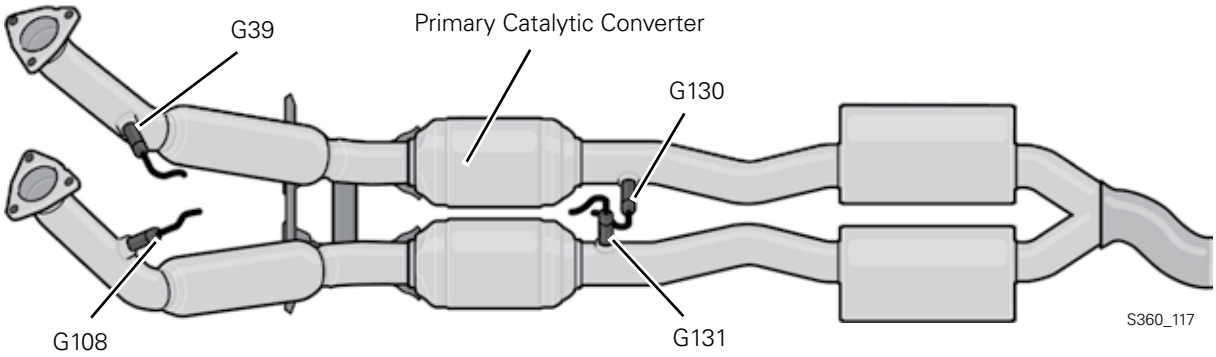

The exhaust system for the 3.2L engine has a primary ceramic catalytic converter for each cylinder bank.

Exhaust gas quality is monitored by two oxygen sensors upstream and downstream of the catalytic converters.

The exhaust system complies with the Low Emission Vehicle (LEV) 2 emission standards.

3.6-liter V6 FSI Engine

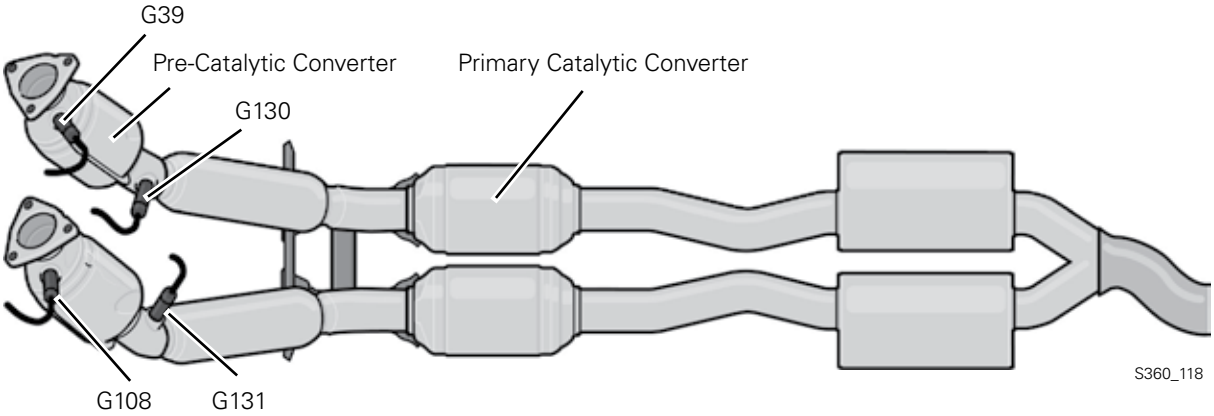

The exhaust system for the 3.6L FSI engine is equipped with two pre-catalytic converters and two main catalytic converters.

Exhaust gas quality is monitored by two oxygen sensors upstream of the pre-catalytic converters and two oxygen sensors downstream of the pre-catalytic converters.

The exhaust system complies with the LEV 2 emission standards.

FSI Technology

Contributing Factors

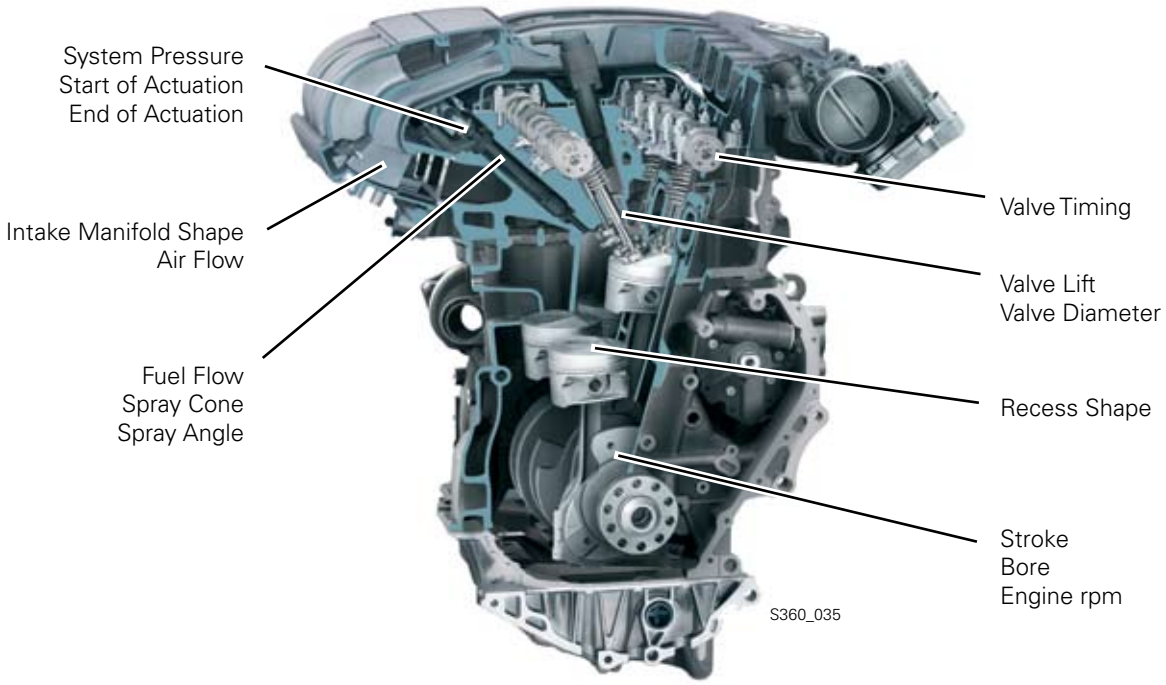

Direct gasoline injection requires precise timing of the combustion process.

The factors affecting the combustion process are:

- Cylinder bore and stroke
- Shape of the recess in the piston surface
- Valve diameter and lift
- Valve timing
- Geometry on the intake ports
- Volumetric efficiency of the fresh air supplied
- Fuel injector characteristics (spray cone, spray angle, flow amount, system pressure and timing)
- Engine rpm

An essential part in the optimization of the combustion performance is the study of airflow characteristics in the combustion chamber. The mixture formation is substantially affected by the flow characteristics of the intake air and the injected fuel.

In order to determine the optimal airflow characteristics and as a result define the optimal piston shape for both banks of cylinders, Doppler Global Velocimetry was used. This procedure makes it possible to study airflow characteristics and mixture formation while the engine is running.

With the help of this procedure and by modifying the characteristics of the fuel injectors it was possible to equalize and match airflow velocities and mixture formation in the combustion chambers for both cylinder banks.

The engine operation is entirely homogenous.

The homogenous split catalytic converter heating process for heating the catalytic converter is new.

Notes

The Fuel System

G6 Transfer Fuel Pump (FP)
G247 Fuel Pressure Sensor
G410 Low Fuel Pressure Sensor
J538 Fuel Pump (FP) Control Module
J623 Engine Control Module (ECM)
N276 Fuel Pressure Regulator Valve

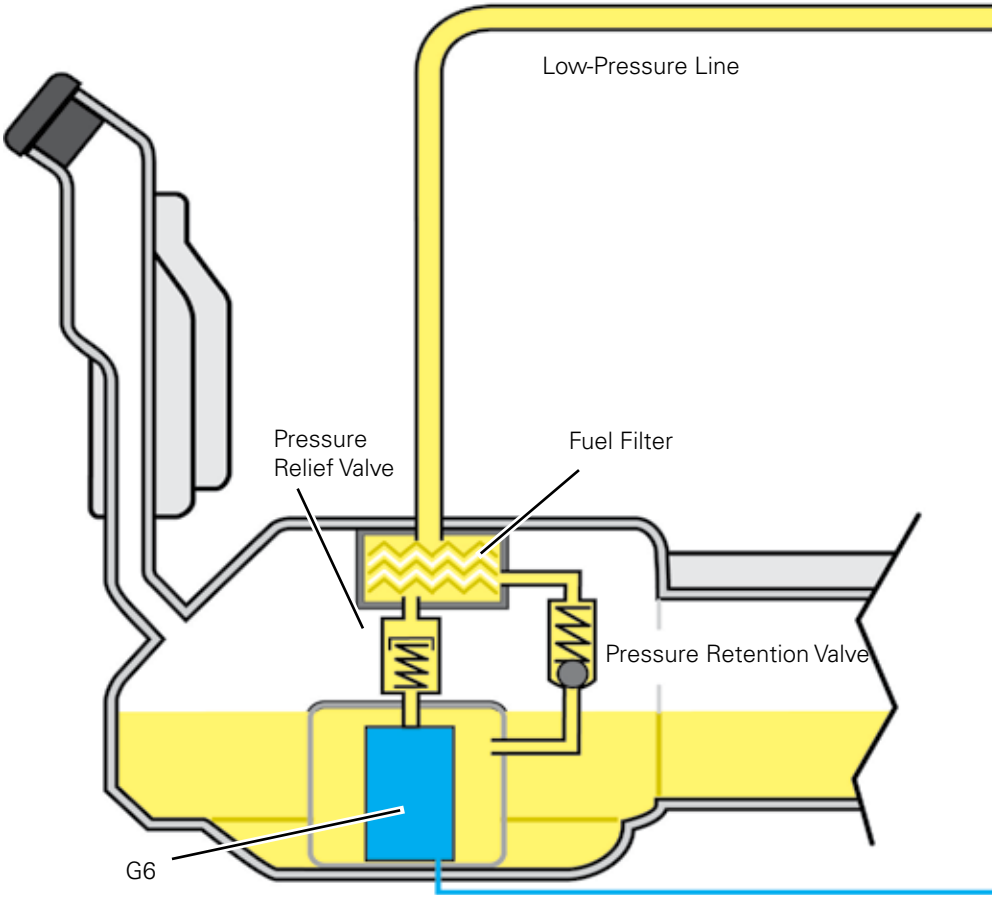

The Low-Pressure Fuel System

The low-pressure system transfers fuel from the fuel tank. The transfer fuel pump is activated by the ECM through the Fuel Pump (FP) Control Module depending on the requirements at a working pressure between 2 and 5 bar.

Operation

The signal from the Low Fuel Pressure Sensor G410 constantly informs the ECM of the current fuel pressure.

The ECM compares the current pressure to the required fuel pressure. If the current fuel pressure is not adequate to meet the fuel needs, the ECM activates the Fuel Pump (FP) Control Module J538.

This control module then activates the transfer fuel pump, which increases the working pressure. When the fuel requirement drops again, the working pressure at the pump drops accordingly.

The pressure retention valve maintains the fuel pressure when the engine is switched off. If the fuel line is ruptured in an accident, the pressure retention valve helps to prevent fuel from escaping.

The pressure relief valve opens at a pressure of 93 psi (6.4 bar) and thus prevents excessive fuel pressure in the low-pressure line.

Excess fuel can flow back into the fuel tank.

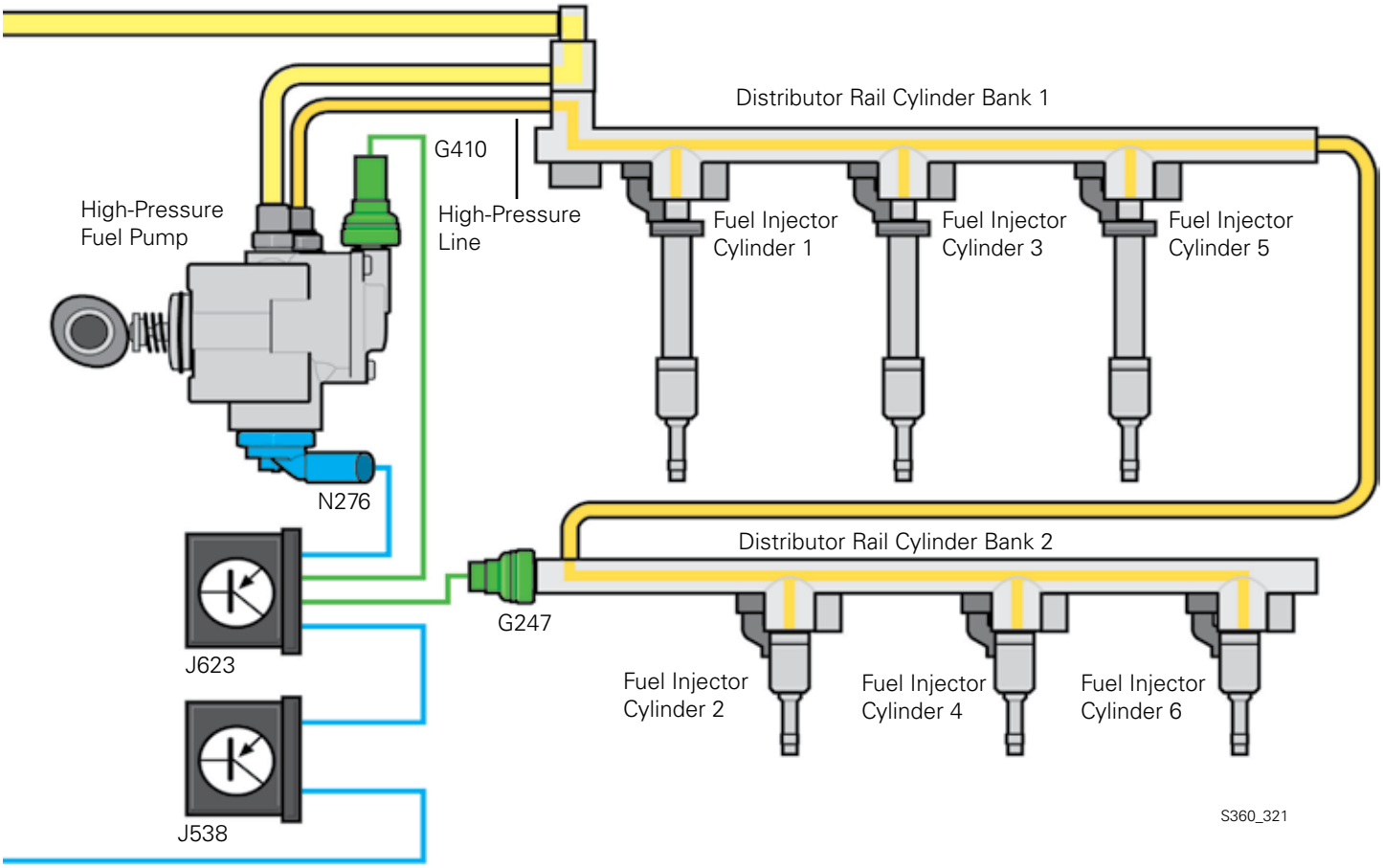

The High-Pressure Fuel System

The Fuel Pressure Sensor G247

The Fuel Pressure Sensor G247 is installed in the fuel distributor of the cylinder bank 2 and informs the ECM of current pressure in the high-pressure fuel system.

The Fuel Pressure Regulator Valve N276

The Fuel Pressure Regulator Valve N276 is threaded into the high-pressure fuel pump and regulates the pressure in the high-pressure fuel system according to the signal from the ECM.

The Pressure Relief Valve

The Pressure Relief Valve is located on the fuel distributor of the cylinder bank 1.

The valve opens a connection to the low-pressure fuel system when the fuel pressure in the high-pressure fuel system is over 1,740 psi (120 bar).

The High-Pressure Fuel Pump

The High-Pressure Fuel Pump is located on the cylinder head and is a piston pump. It is driven by the camshaft and generates a fuel pressure of 1,595 psi (110 bar).

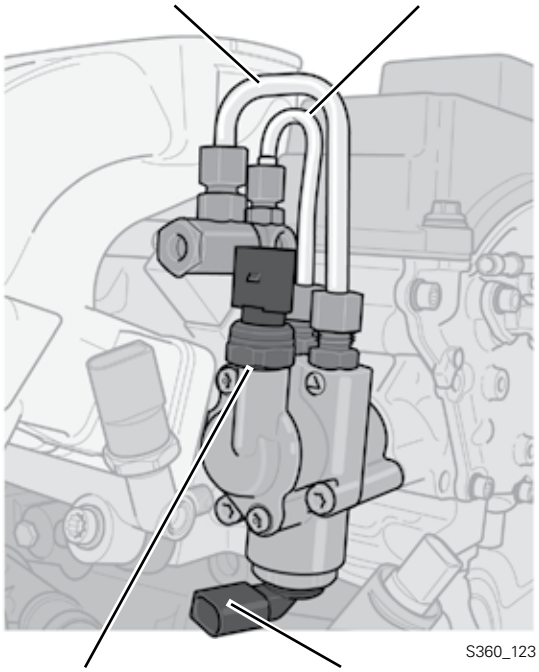

The High-Pressure Fuel Pump Drive

The High-Pressure Fuel Pump is driven by a pinion gear with dual cam.

The dual cam actuates the pump piston through a roller. The pump piston generates the high pressure in the pump.

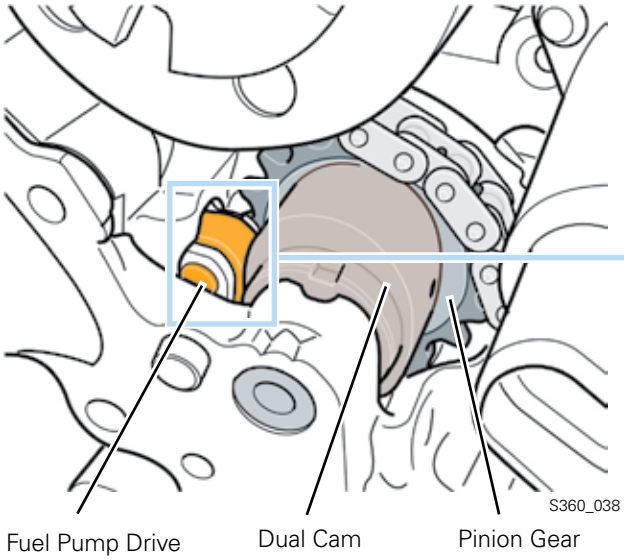

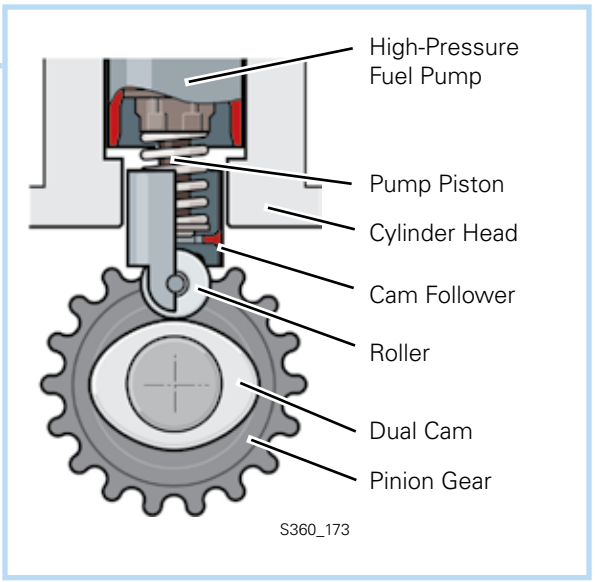

In order to install the camshaft roller chain, the High-Pressure Fuel Pump pinion must be locked with special tool T10332.

Please refer to the Volkswagen Self-Study Program 821503 “The 2.0L FSI Turbocharged Engine Design and Function” for more information about the High-Pressure Fuel Pump.

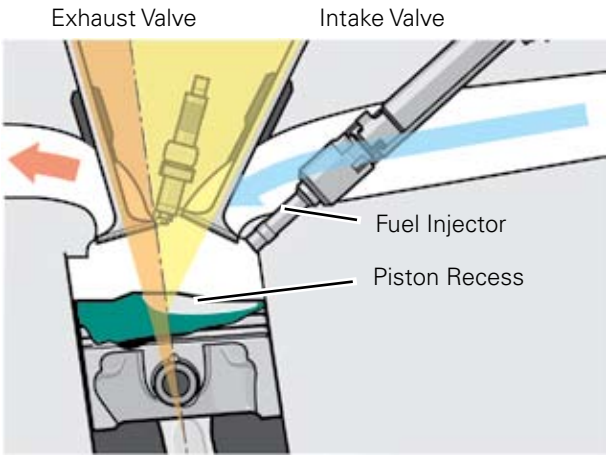

Valve Angle Cylinder 1, 3, 5 S360_252

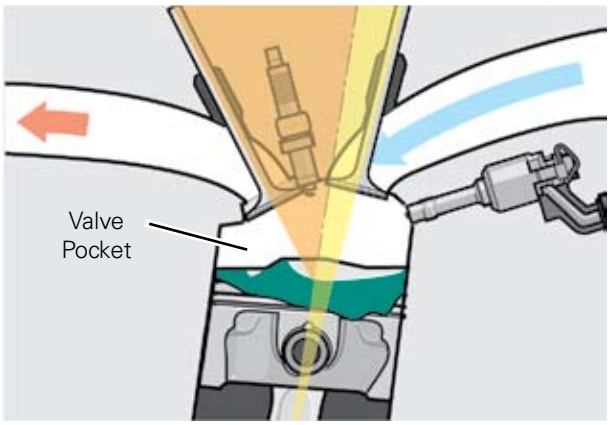

Valve Angle Cylinder 2, 4, 6 S360_251

Fuel Injector Characteristics

Since the fuel injectors are inserted from the same side for both banks of cylinders, the piston recess must be shaped differently. This is necessary because the fuel injectors and the intake valves for both cylinder banks are positioned at different angles.
The shape and orientation of the fuel injection play an important role along with the quantity of fuel injected and the length of injection.

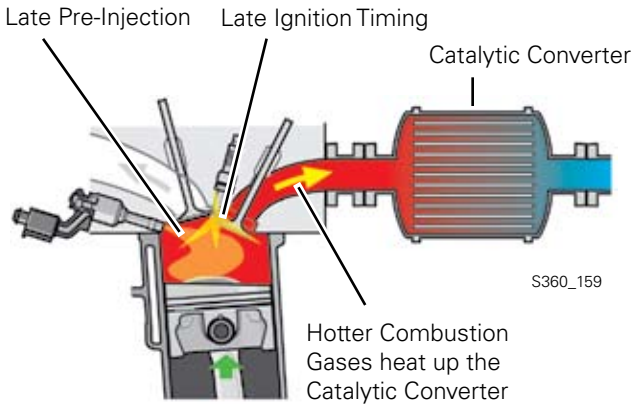

The Homogenous Split Catalytic Converter Heating Process

The Homogenous Split Catalytic Converter Heating Process brings the catalytic converters to operating temperature quickly after a cold start.

To achieve this, the fuel is injected twice during one combustion cycle. The first injection takes place in the intake stroke. This achieves an even distribution of the fuel-air mixture.

In the second injection, a small amount of fuel is additionally injected shortly before ignition Top Dead Center (TDC). The late injection increases exhaust gas temperature. The hot exhaust gas heats up the catalytic converter so that it reaches operating temperature more quickly.

System Overview

Sensors

Engine Speed (RPM) Sensor G28

Mass Air Flow (MAF) Sensor G70

Throttle Position (TP) Sensor G79
Accelerator Pedal Position Sensor 2 G185

Clutch Position Sensor G476

Throttle Valve Control Module J338 with
Throttle Drive Angle Sensor 1 (for Electronic Power Control (EPC)) G187
Throttle Drive Angle Sensor 2 (for Electronic Power Control (EPC)) G188

Camshaft Position (CMP) Sensor G40
Camshaft Position (CMP) Sensor 2 G163

Engine Coolant Temperature (ECT) Sensor G62
Engine Coolant Temperature (ECT) Sensor (on Radiator) G83

Knock Sensor (KS) 1 G61
Knock Sensor (KS) 2 G66

Brake Light Switch F

Fuel Pressure Sensor G247

Low Fuel Pressure Sensor G410

Oil Level Thermal Sensor G266

Heated Oxygen Sensor (HO2S) G39
Heated Oxygen Sensor (HO2S) 2 G108
Oxygen Sensor (O2S) Behind Three Way Catalytic Converter (TWC) G130
Oxygen Sensor (O2S) 2 Behind Three Way Catalytic Converter (TWC) G131

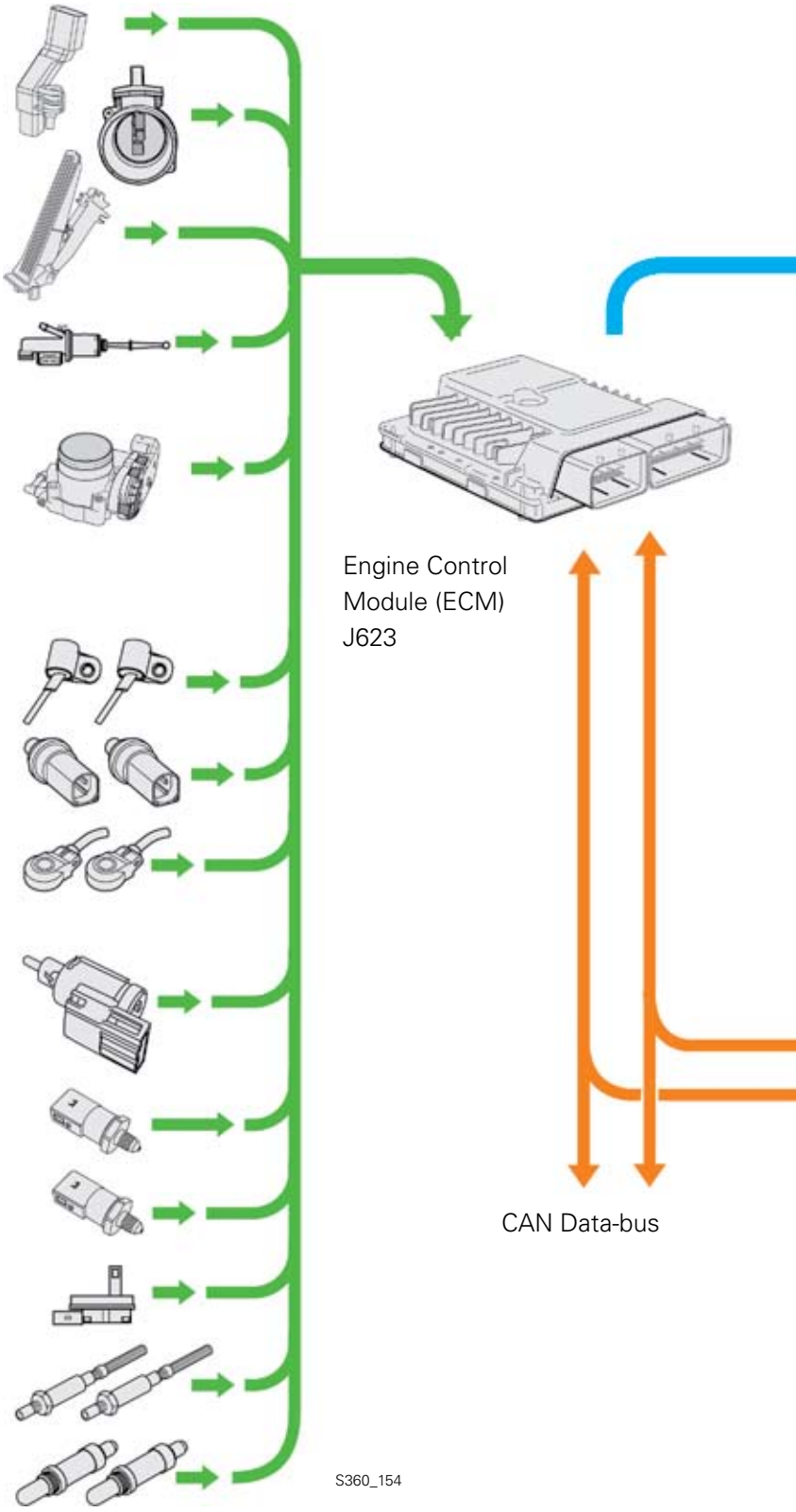

Actuators

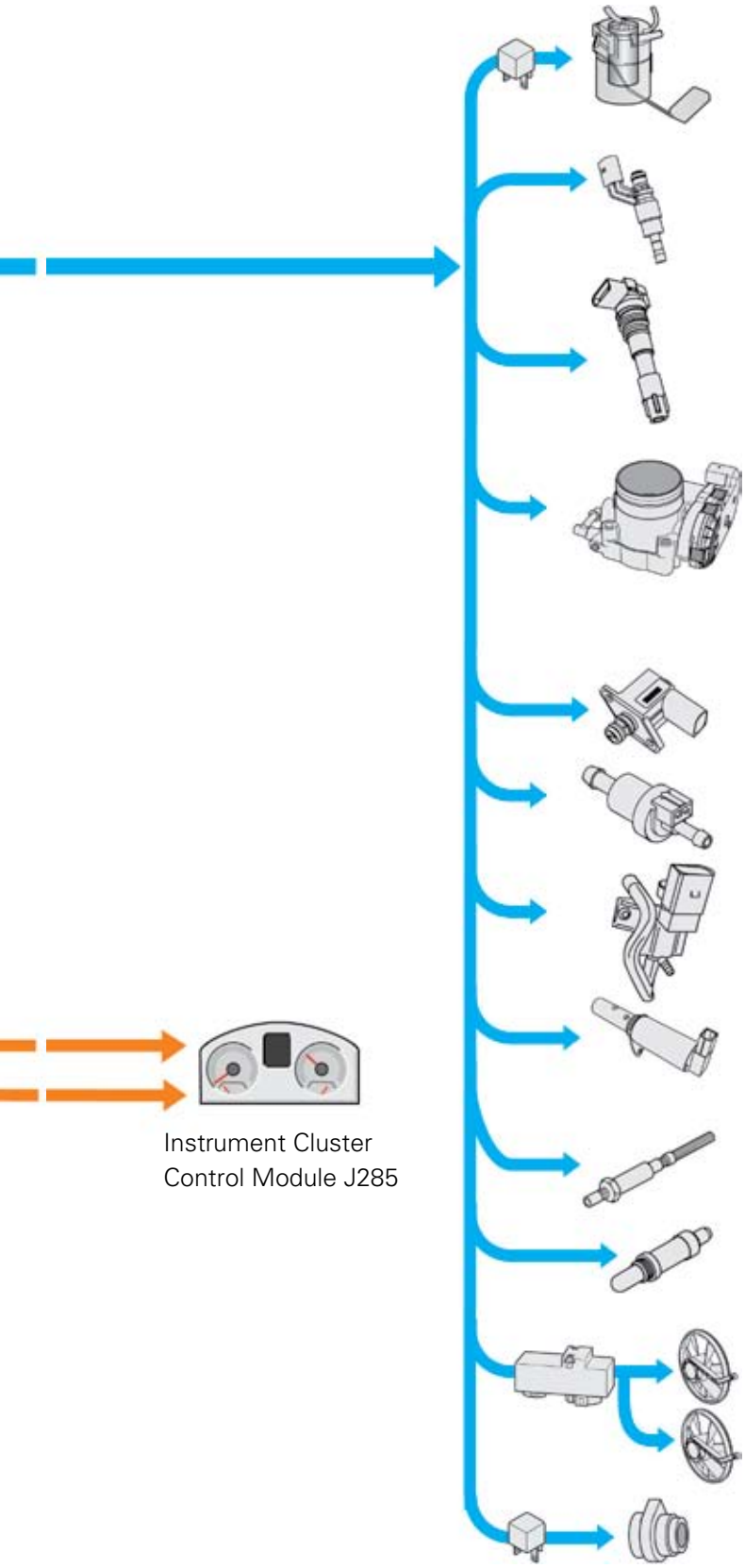

Fuel Pump (FP) Control Module J538
Transfer Fuel Pump (FP) G6

Cylinder 1-6 Fuel Injector
N30, N31, N32, N33, N83, N84

Ignition Coil 1-6 with Power Output Stage
N70, N127, N291, N292, N323, N324

Throttle Valve Control Module J338 with
Throttle Drive (for Electronic Power Control (EPC))
G186

Fuel Pressure Regulator Valve N276

Evaporative Emission (EVAP) Canister Purge
Regulator Valve N80

Intake Manifold Runner Control (IMRC) Valve N316

Camshaft Adjustment Valve 1 N205
Camshaft Adjustment Valve 1 (exhaust) N318

Oxygen Sensor (O2S) Heater Z19
Oxygen Sensor (O2S) 2 Heater Z28

Oxygen Sensor (O2S) 1 (behind Three Way Catalytic
Converter (TWC)) Heater Z29
Oxygen Sensor (O2S) 2 (behind Three Way Catalytic
Converter (TWC)) Heater Z30

Coolant Fan Control (FC) Control Module J293
Coolant Fan V7
Coolant Fan 2 V177

Recirculation Pump Relay J160
Recirculation Pump V55

Instrument Cluster
Control Module J285

Sensors

Engine Speed (RPM) Sensor G28

The Engine Speed Sensor is threaded into the side of the cylinder block. It scans the sensor wheel on the crankshaft.

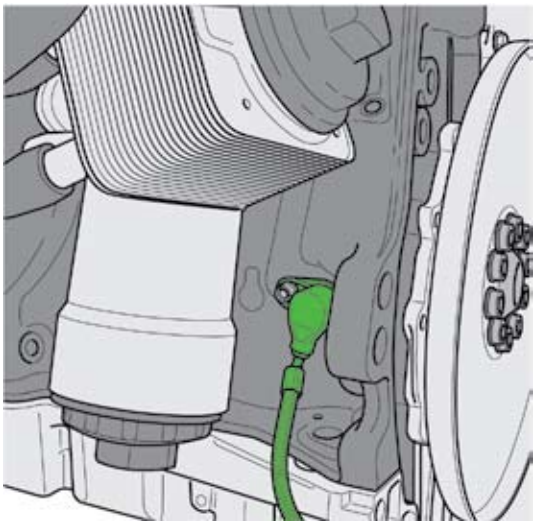

S360_111

Signal Utilization
The engine speed and the exact position of the crankshaft relative to the camshaft are determined by the engine speed sensor. Using this information, the injection quantity and the start of injection are calculated.

Effects of Signal Failure
In case of signal failure, the engine is switched off and cannot be restarted.

Mass Airflow Sensor G70

The 6th generation hot film mass airflow sensor (HFM6) is used in the 3.2L and the 3.6L FSI engine. It is located in the intake manifold and operates based on a thermal measurement principle, as did its predecessor.

Characteristics

- Micromechanical sensor element with reverse current detection
- Signal processing with temperature compensation
- High measurement accuracy
- High sensor stability

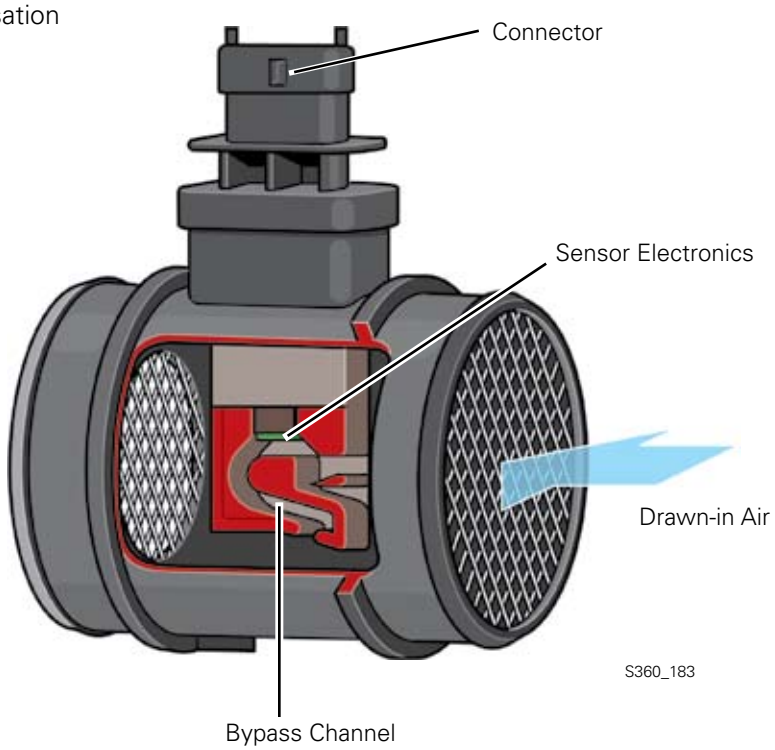

Signal Utilization

The signal from the mass airflow sensor is used in the ECM to calculate the volumetric efficiency. Based on the volumetric efficiency, and taking into consideration the lambda value and ignition timing, the control module calculates the engine torque.

Effects of Signal Failure

If the mass airflow sensor fails, the engine management system calculates a substitute value.

The Throttle Position (TP) Sensor G79 and the Accelerator Pedal Position Sensor 2 G185

The two throttle position sensors are part of the accelerator pedal module and are contact-free sensors.
The ECM detects the driver's request from these sensor signals.

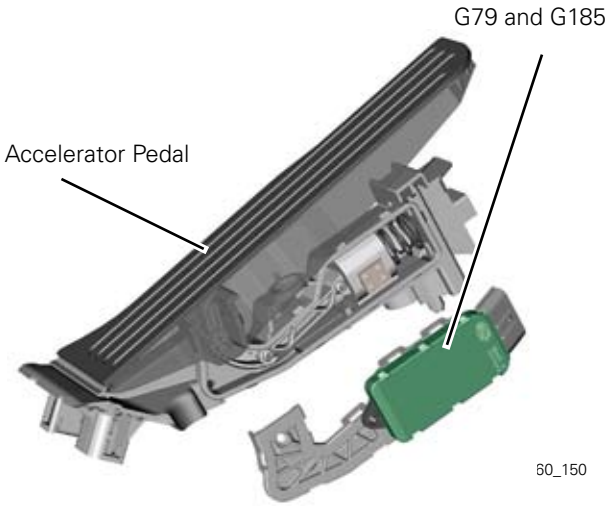

Signal Utilization
The ECM uses the signals from the Throttle Position Sensor to calculate the fuel injection volume.

Effects of a Signal Failure
If one or both sensors fails, an entry is made in the DTC memory and the error light for electronic power control is switched on. Comfort functions such as cruise control or engine drag torque control are switched off.

Clutch Position Sensor G476

The Clutch Position Sensor is a mechanically actuated switch located on the clutch pedal. It is only required on vehicles with manual transmission.

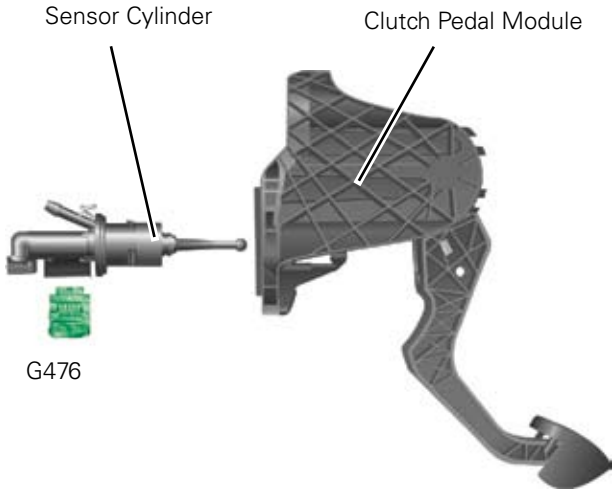

Signal Utilization
The signal is used to control the cruise control and to control the ignition timing and quantity of fuel when shifting.

Effects of a Signal Failure
The cruise control cannot be turned on. It also results in driveability problems, such as engine jerking and increased RPM when shifting.

The Throttle Drive Angle Sensor 1 G187 and Throttle Drive Angle Sensor 2 G188 in the Throttle Valve Control Unit

These sensors determine the current position of the throttle valve and send this information to the ECM.

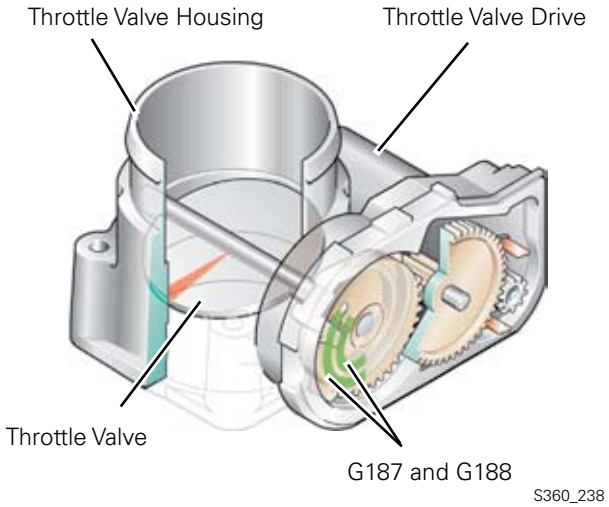

Signal Utilization
The ECM recognizes the position of the throttle valve from the angle sensors signals. The signals from the two sensors are redundant, meaning that both sensors provide the same signal.

Effects of a Signal Failure

Example 1

The ECM receives an implausible signal or no signal at all from an angle sensor:

- An entry is made in the DTC memory and the error light for electric throttle operation is switched on
- Systems which affect torque, (e.g. cruise control system or engine drag torque control), are switched off
- The load signal is used to monitor the remaining angle sensor
- The accelerator pedal responds normally

Example 2

The ECM receives an implausible signal or no signal from both angle sensors:

- An entry is made for both sensors in the DTC memory and the error light for electric throttle operation is switched on
- The throttle valve drive is switched off
- The engine runs only at an increased idle speed of 1,500 RPM and no longer reacts to the accelerator pedal

The Camshaft Position Sensors (CMP) G40 and G163

Both Hall sensors are located in the engine timing chain cover. Their task is to communicate the position of the intake and exhaust camshafts to the ECM.

To do this, they scan a quick-start sensor wheel which is located on the individual camshaft.

The ECM recognizes the position of the intake camshaft from the Camshaft Position (CMP) Sensor G40, and recognizes the position of the exhaust camshaft from Camshaft Position (CMP) Sensor 2 G163.

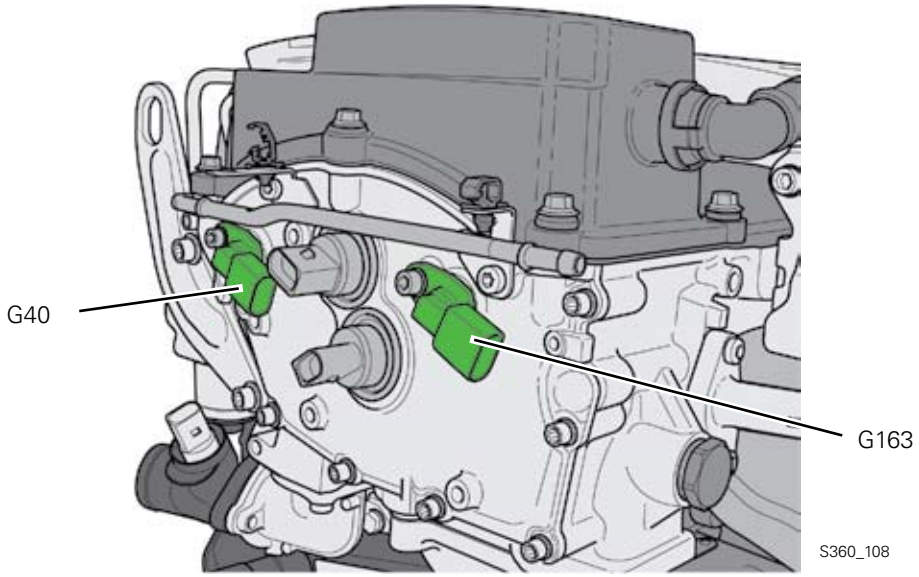

Signal Utilization
Using the signal from the Camshaft Position Sensors, the precise position of the camshaft relative to the crankshaft is determined very quickly when the engine is started. Used in combination with the signal from the Engine Speed (RPM) Sensor G28, the signals from the Camshaft Position Sensors allow to detect which cylinder is at TDC.

The fuel can be injected into the corresponding cylinder and ignited.

Effects of a Signal Failure
In case of signal failure, the signal from the Engine Speed (RPM) Sensor G28 is used instead. Because the camshaft position and the cylinder position cannot be recognized as quickly, it may take longer to start the engine.

The Engine Coolant Temperature (ECT) Sensor G62

This sensor is located at the coolant distributor above the oil filter on the engine and it informs the ECM of the coolant temperature.

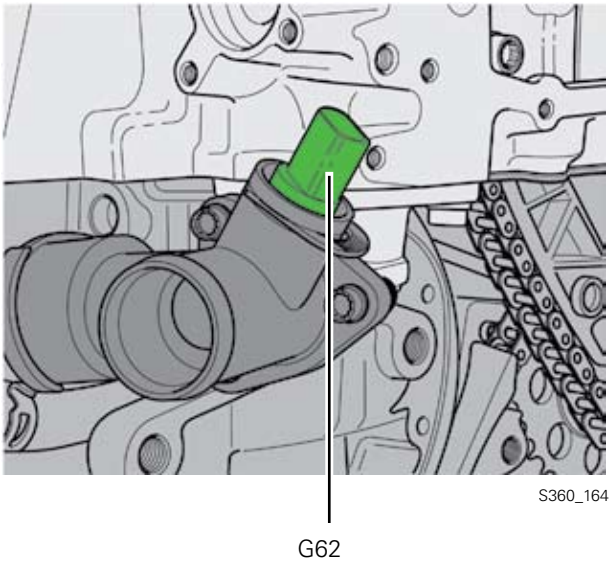

Signal Utilization
The coolant temperature is used by the ECM for different engine functions. For example, the computation for the injection amount, compressor pressure, start of fuel delivery and the amount of exhaust gas recirculation.

Effects of a Signal Failure
If the signal fails, the ECM uses the signal from the Engine Coolant Temperature (ECT) Sensor G83.

The Engine Coolant Temperature (ECT) Sensor (on the Radiator) G83

The Engine Coolant Temperature Sensor (on the Radiator) G83 is located in the radiator output line and measures the coolant exit temperature.

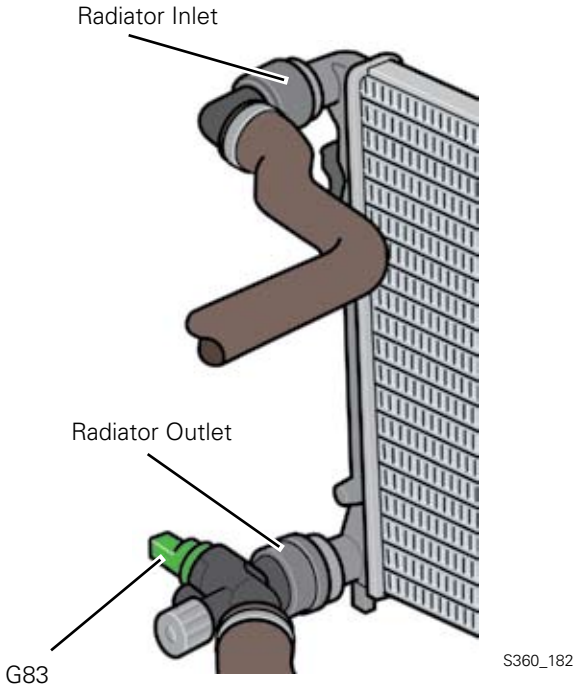

Signal Utilization
The radiator fan is activated by comparing both signals from the Engine Coolant Temperature Sensors G62 and G83.

Effects of a Signal Failure
If the signal from the Engine Coolant Temperature Sensor G83 is lost, the first speed engine coolant fan is activated permanently.

Knock Sensor (KS) 1 G61 and Knock Sensor (KS) 2 G66

The Knock Sensors are threaded into the crankcase. They detect combustion knocks in individual cylinders. To prevent combustion knock, a cylinder-selective knock control overrides the electronic control of the ignition timing.

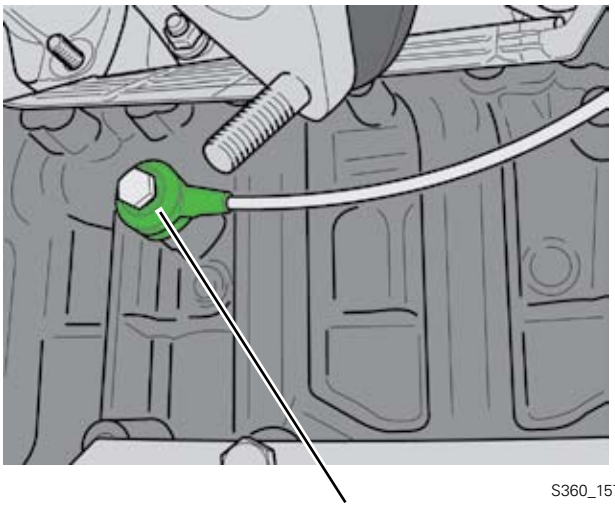

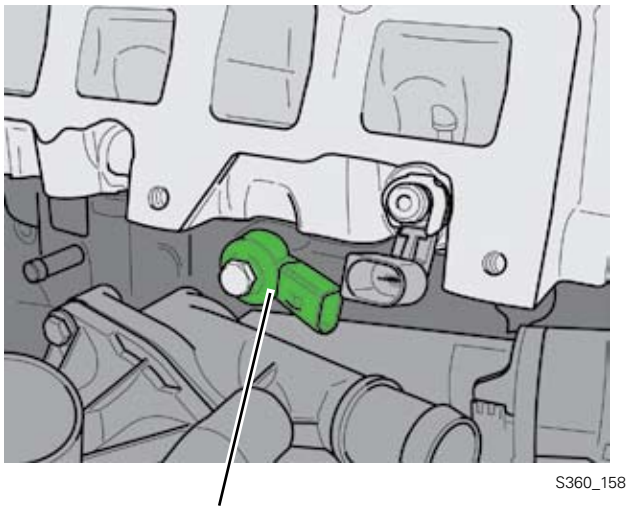

Signal Utilization
Based on the knock sensor signals, the ECM initiates ignition timing adjustment in the knocking cylinder until knocking stops.

Effects of a Signal Failure
In the event of a knock sensor failure, the ignition timing for the affected cylinder group is retarded.

This means that a safety timing angle is set in the "late" direction. This can lead to an increase in fuel consumption. Knock control for the cylinder group of the remaining knock sensor remains in effect.

If both knock sensors fail, the engine management system goes into emergency knock control in which the ignition angle is retarded across the board so that full engine power is no longer available.

The Brake Light Switch F

The Brake Light Switch is located on the tandem master cylinder. It scans a magnetic ring on the tandem master cylinder piston using a contactless Hall Element.

This switch provides the ECM with the signal "Brake actuated" via the CAN data bus drive.

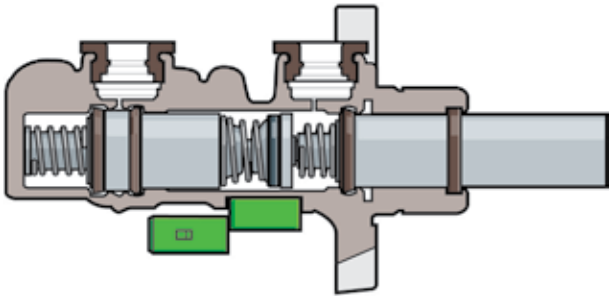

S360_177

Signal Utilization
When the brake is operated, the cruise control system is deactivated. If the signal "accelerator pedal actuated" is detected first and "brake actuated" is detected next, the idle speed is increased.

Effects of a Signal Failure
If the sensor signal is lost, the amount of fuel injected is reduced and the engine has less power. The cruise control system is also deactivated.

The Fuel Pressure Sensor G247

The Fuel Pressure Sensor is located on the lower fuel distributor pipe. It measures the fuel pressure in the high-pressure fuel system.

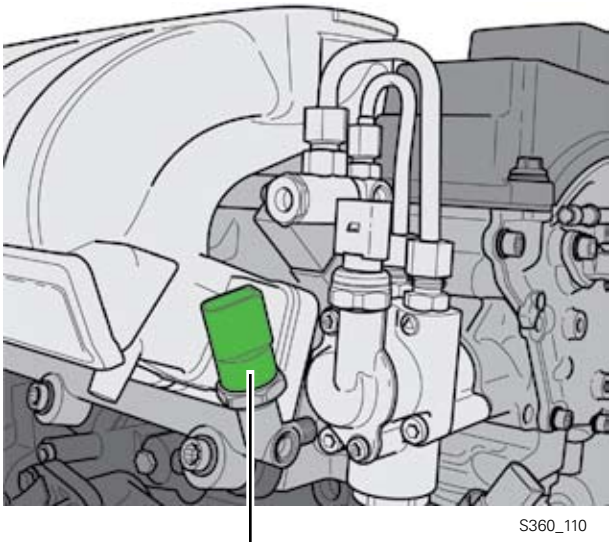

S360_110

Signal Utilization
The Engine Control Module (ECM) analyzes the signal and regulates the fuel high pressure through the Fuel Pressure Regulator Valve N276 in the high-pressure pump.

Effects of a Signal Failure
If the Fuel Pressure Sensor fails, the fuel pressure regulator valve is activated at a fixed value by the ECM.

The Low Fuel Pressure Sensor G410

The Low Fuel Pressure Sensor is located on the high-pressure fuel pump. It measures the fuel pressure in the low-pressure fuel system.

Signal Utilization
The signal is used by the ECM to regulate the low-pressure fuel system. Based on the signal from the sensor, a signal is sent by the ECM to the Fuel Pump Control Module J538, which then regulates the fuel pump as needed.

Effects of a Signal Failure
If the Low Fuel Pressure Sensor fails, the fuel pressure is not regulated as needed. Fuel pressure is maintained at a constant 72 psi (5 bar).

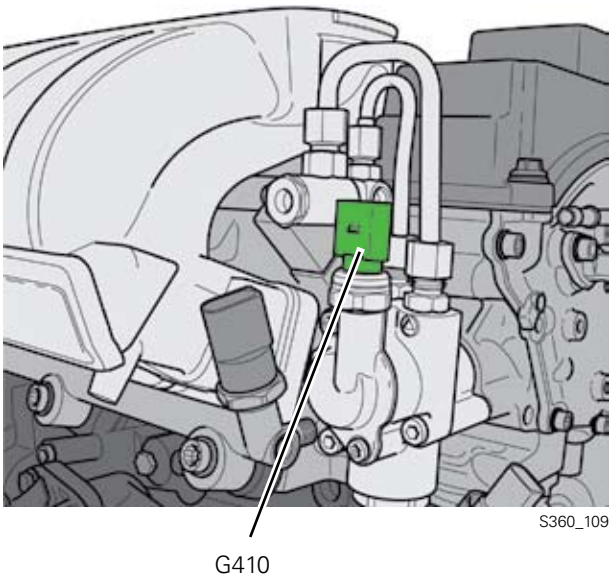

S360_109

The Oil Level Thermal Sensor G266

The Oil Level Thermal Sensor is threaded into the oil pan from below. Its signal is used by several control modules. The Instrument Cluster Control Module J285 uses this signal to display the engine oil temperature.

Signal Utilization
The ECM receives the signal over the CAN data bus and uses the oil temperature signal to control the retarded setting of the exhaust camshaft at high oil temperatures.

Effects of a Signal Failure
The control module uses the signal from the Coolant Temperature Sensor instead of the oil temperature signal.

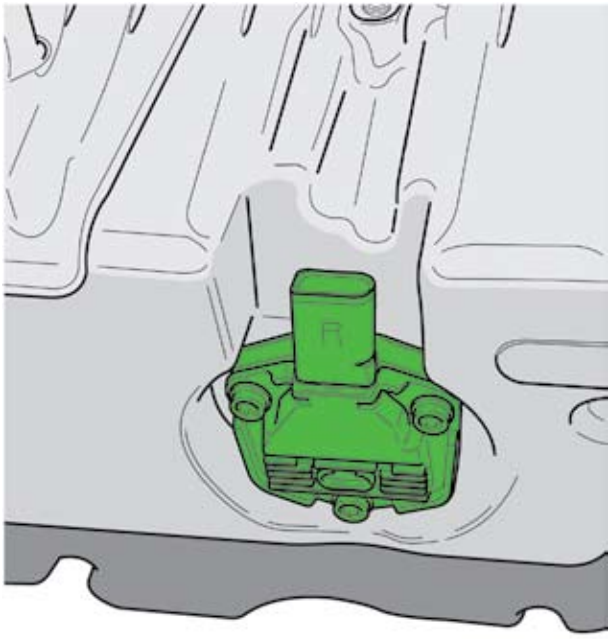

S360_156

The Heated Oxygen Sensors (HO2S) G39 and the Heated Oxygen Sensors (HO2S) 2 G108

A broadband oxygen sensor is assigned to each pre-catalytic converter as a pre-catalytic oxygen sensor. Using the broadband oxygen sensors, a wide range of oxygen concentration in the exhaust gas can be calculated. Both oxygen sensors are heated to reach operating temperature more quickly.

Broadband Oxygen Sensor

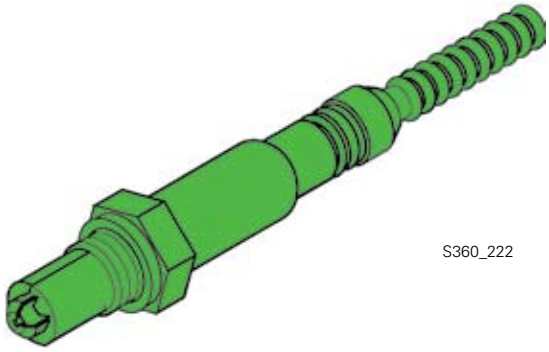

Signal Utilization
The signals from the Heated Oxygen Sensors are one of the variables used in calculating the injection timing.

Effects of a Signal Failure
If the pre-catalytic converter oxygen sensor fails, there is no closed loop control. The fuel injection adaptation is not available. An emergency running mode is enabled using an engine characteristics map.

The Oxygen Sensor (O2S) Behind Three Way Catalytic Converter (TWC) G130 and the Oxygen Sensor (O2S) 2 Behind Three Way Catalytic Converter (TWC) G131

The planar oxygen sensors are located downstream of the pre-catalytic converter. They measure the remaining oxygen content in the exhaust gas. Based on the amount of oxygen remaining in the exhaust gas, the ECM can draw conclusions about the catalytic converter operation.

Planar Oxygen Sensor

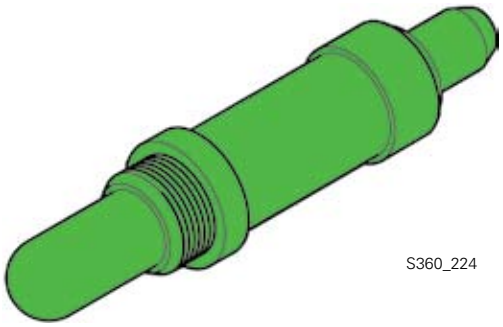

Signal Utilization
The Engine Control Module uses the signals from the post-catalytic converter oxygen sensors to check the catalytic converter operation and the closed-loop oxygen control system.

Effects of a Signal Failure
If the post-catalytic converter oxygen sensor fails, the closed loop operation continues. The operation of the catalytic converter can no longer be checked.

The Actuators

Camshaft Adjustment Valve 1 N205, Camshaft Adjustment Valve 1 (exhaust) N318

The solenoid valves are integrated in the camshaft adjustment housing. They distribute the oil pressure based on the ECM signals for the adjustment direction and adjustment travel at the camshaft adjusters.

Both camshafts are continuously adjustable:

- Intake camshaft at 52° of the crankshaft angle
- Exhaust camshaft at 42° of the crankshaft angle
- Maximum valve overlap angle 47°

The exhaust camshaft is mechanically locked when no oil pressure is available (engine not running).

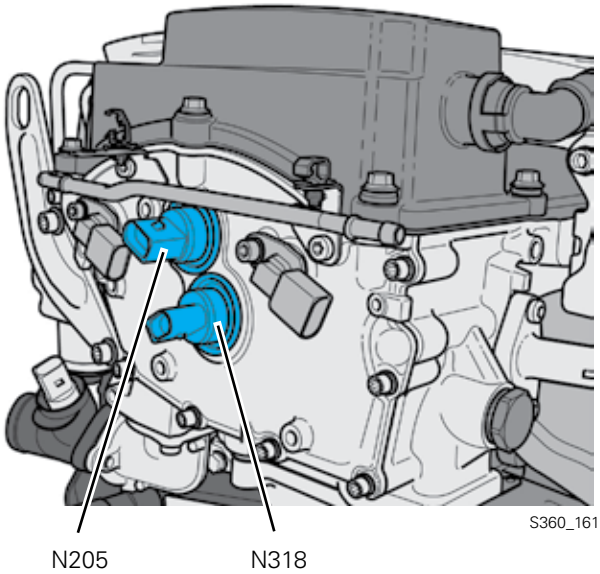

Effects of a Signal Failure

If an electrical connection to the camshaft adjusters is defective or if a camshaft adjuster fails because it is mechanically seized or as a result of inadequate oil pressure, there is no camshaft adjustment.

The Transfer Fuel Pump (FP) G6 and the Fuel Level Sensor G

The Transfer Fuel Pump and the Fuel Filter are combined in the Fuel Transfer Unit. The Fuel Transfer Unit is located in the fuel tank.

Operation
The Transfer Fuel Pump transfers the fuel in the low-pressure fuel system to the high-pressure fuel pump. It is activated by a Pulse Width Modulation (PWM) signal from the Fuel Pump Control Module.

The Transfer Fuel Pump transfers as much fuel as the engine requires at any point in time.

Effects of a Failure
If the Transfer Fuel Pump fails, engine operation is not possible.

The Fuel Pressure Regulator Valve N276

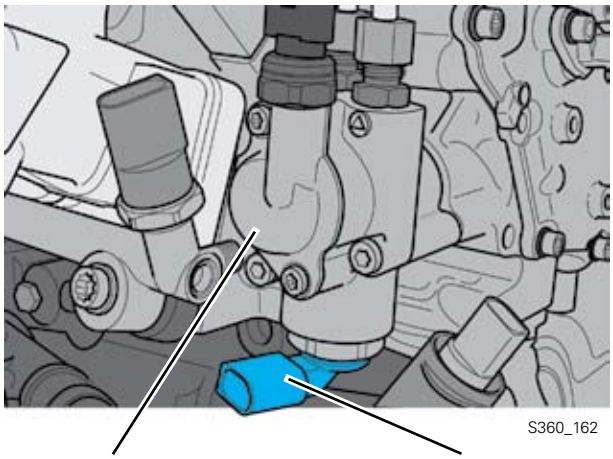

The Fuel Pressure Regulator Valve is located on the underside of the High-Pressure Fuel Pump.

The ECM regulates the fuel high-pressure through the Fuel Pressure Regulator Valve at a level between 507 and 1,450 psi (35 and 100 bar).

Effects of a Failure
The ECM goes into emergency running mode.

The Ignition Coils 1-6 with Power Output Stage N70, N127, N291, N292, N323, N324

The ignition coil and power output stage are one component. The ignition timing is controlled individually for each cylinder.

Effects of a Failure
If an ignition coil fails, fuel injection for the affected cylinder is switched off. This is possible for a maximum of two cylinders.

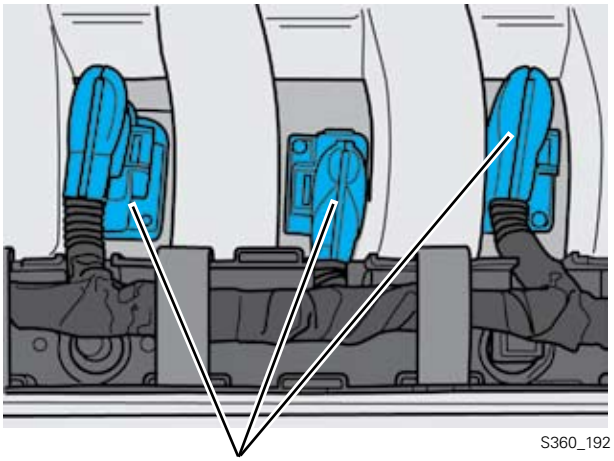

The Evaporative Emission (EVAP) Canister Purge Regulator Valve N80

The Evaporative Emission Canister Purge Regulator Valve is located on the front (belt drive side) of the engine and is triggered by the ECM. The fuel vapors collected in the evaporative emission canister are sent for combustion and thus the evaporative emission canister is emptied.

Effects of a Signal Failure
If the current is interrupted, the valve remains closed. The fuel tank is not vented to the engine.

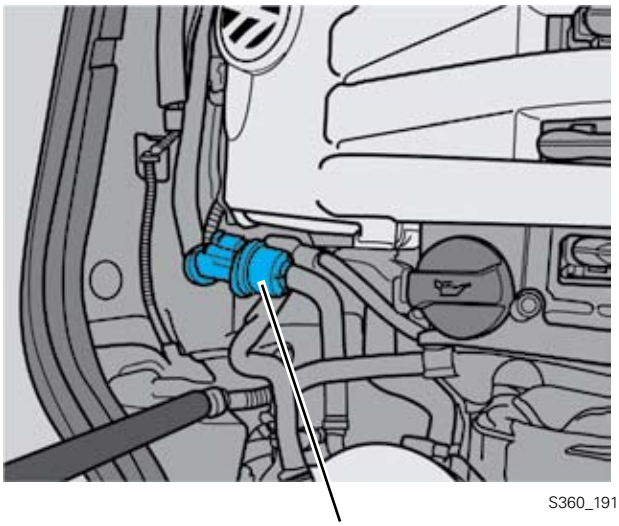

The Cylinders 1-6 Fuel Injectors N30, N31, N32, N33, N83, N84

The High-Pressure Fuel Injectors are inserted into the cylinder head. They are triggered by the ECM in accordance with the firing orders. When triggered, they spray fuel directly into the cylinder.

Due to the design of the engine, injection takes place from one side. For this reason, the fuel injectors for cylinder bank 1, 3 and 5 are longer than the fuel injectors for cylinder bank 2, 4 and 6.

S360_137

Effects of a Failure
A defective fuel injector is recognized by misfire detection and is no longer triggered.

Throttle Drive for Electronic Power Control (EPC) G186

The Throttle Drive for Electronic Power Control is an electrical motor which operates the throttle valve through a gear mechanism.

The range of adjustment is stepless from idle to the wide-open throttle position.

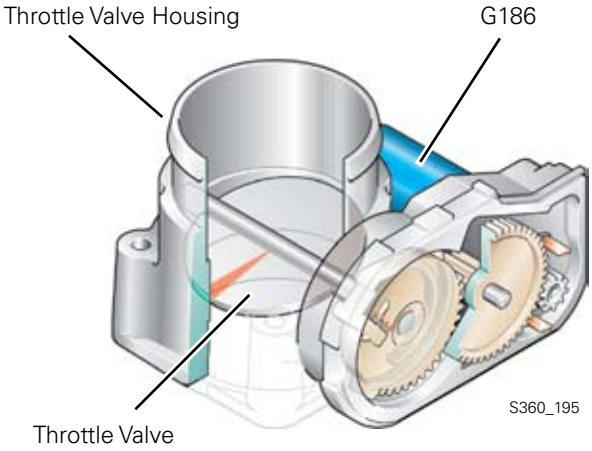

S360_195

Effects of a Failure
If the throttle drive fails, the throttle valve is automatically pulled to the emergency running position. An entry is made in the DTC memory and the error lamp for electronic power control is switched on.

Intake Manifold Runner Control (IMRC) Valve N316

The Intake Manifold Runner Control Valve is located on the variable intake manifold and is an electropneumatic valve.

When it is activated, it operates the intake manifold flap to change the length of the intake manifold.

Effects of a Failure
If the valve fails, the intake manifold flaps are pulled by a mechanical spring to an emergency running position. This position corresponds to the power setting of the intake manifold.

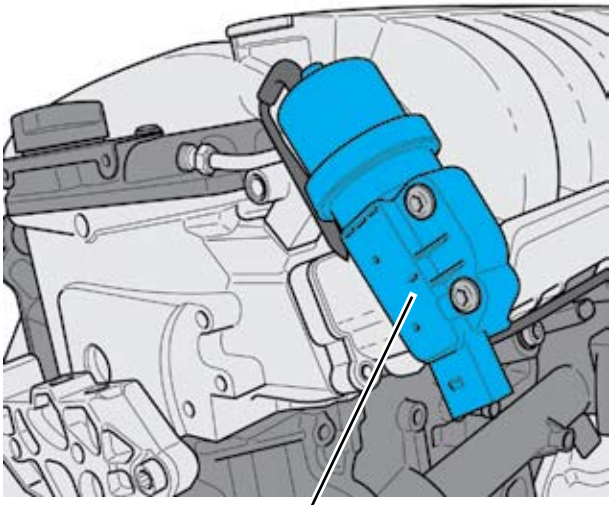

S360_051

The Recirculation Pump V55

The Recirculation Pump is activated by the ECM. It assists the mechanical coolant pump when the engine is running. After the engine is turned off and with a lack of moving air resulting from the vehicle motion, the Recirculation Pump may be switched on depending on the coolant temperature, to prevent heat buildup in the engine.

Effects of a Failure
If the Recirculation Pump fails, the engine may overheat.

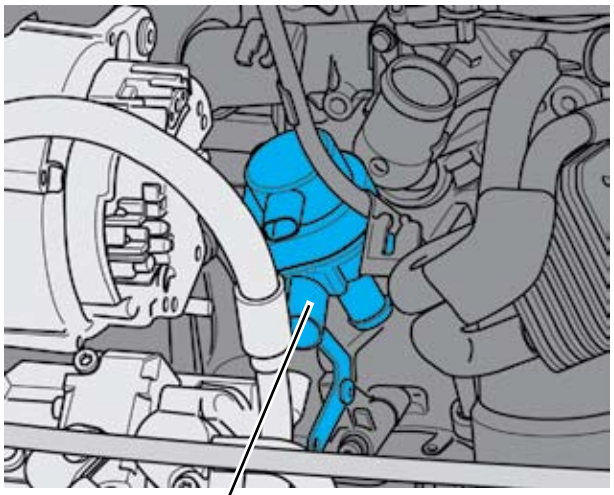

S360_045

Oxygen Sensor (O2S) Heaters Z19, Z28, Z29 and Z30

The job of the Oxygen Sensor Heater is to bring the ceramic of the oxygen sensor rapidly up to its operating temperature of approx. 1652°F (900°C) when the engine is started and the temperature is low. The oxygen sensor heater is controlled by the ECM.

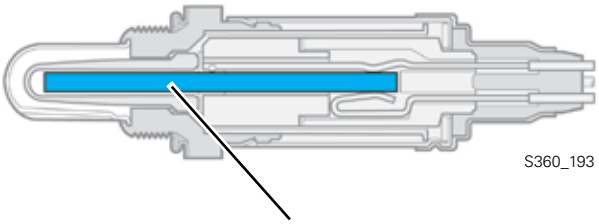

Oxygen Sensor Heater

Effects of a Failure

The engine can no longer be regulated with respect to the emissions.

Notes

The Control Modules in the CAN Data Bus

The schematic below shows the Engine Control Module J623 integrated into the CAN data bus structure of the vehicle. Information is exchanged between the control modules over the CAN data bus.

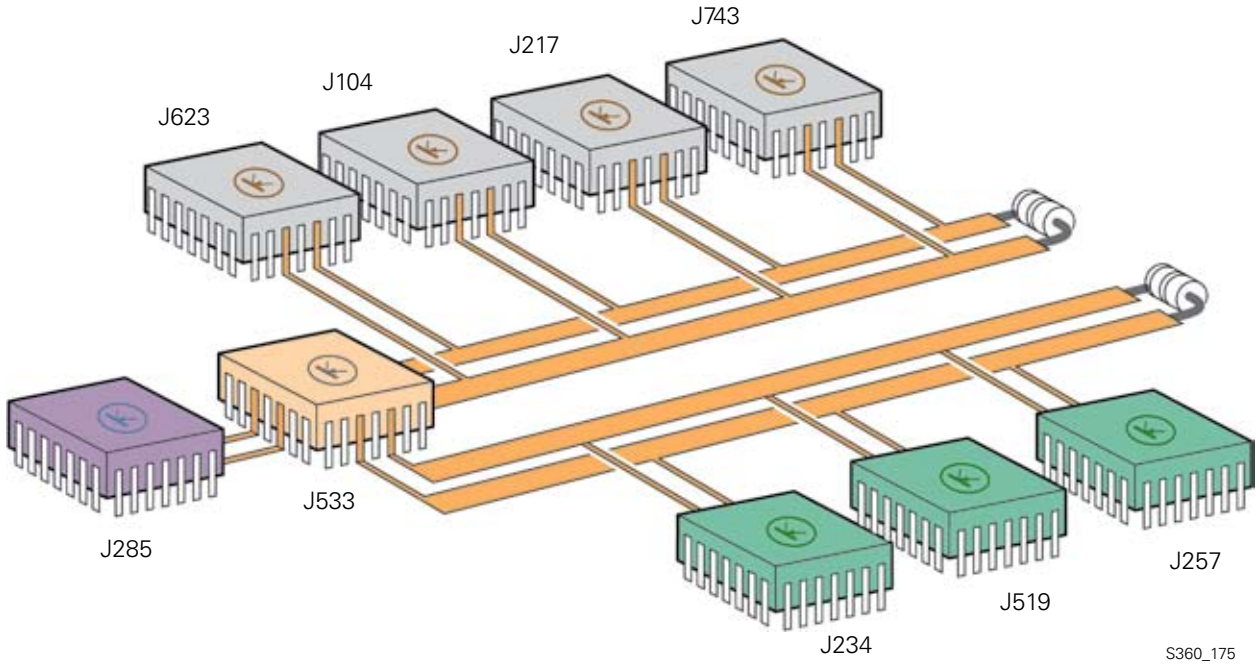

Legend

- **J623** Engine Control Module (ECM)
- **J104** ABS Control Module
- **J217** Transmission Control Module (TCM)*
- **J234** Airbag Control Module
- **J285** Instrument Cluster Control Module
- **J519** Vehicle Electrical System Control Module
- **J527** Steering Column Electronic Systems Control Module
- **J533** Data Bus On Board Diagnostic Interface
- **J743** Direct Shift Gearbox (DSG) Mechatronic*

Color coding

- Powertrain CAN-bus
- Comfort system CAN-bus
- Infotainment CAN-bus

* Either J217 or J743 will be used.

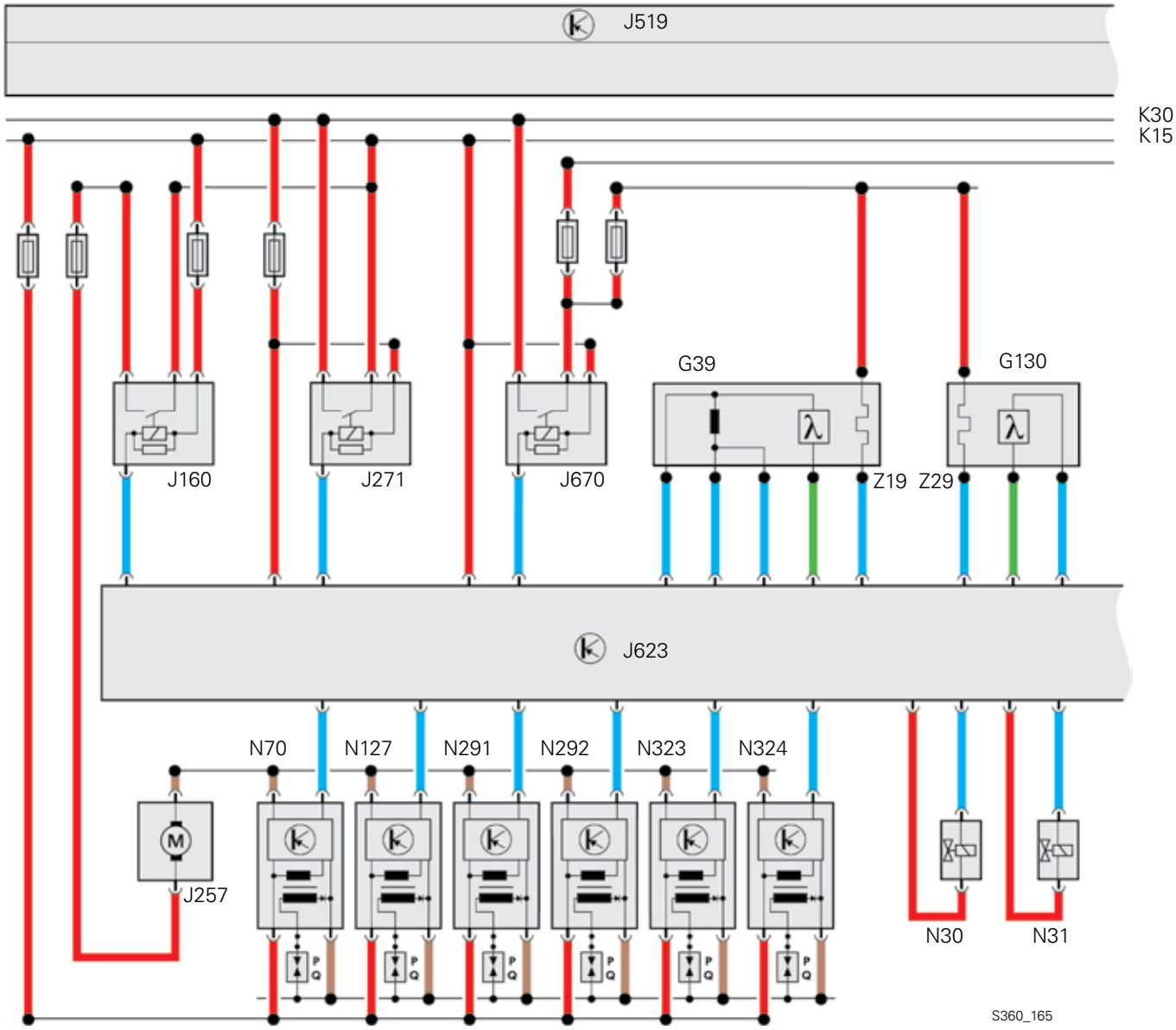

G39 Heated Oxygen Sensor (HO2S)

G130 Oxygen Sensor (O2S) Behind Three Way Catalytic Converter (TWC)

J160 Recirculation Pump Relay

J271 Motronic Engine Control Module (ECM) Power Supply Relay

J519 Vehicle Electrical System Control Module

J623 Engine Control Module (ECM)

J670 Motronic Engine Control Module (ECM) Power Supply Relay 2

N30 Cylinder 1 Fuel Injector

N31 Cylinder 2 Fuel Injector

N70 Ignition Coil 1 with Power Output Stage

N127 Ignition Coil 2 with Power Output Stage

N291 Ignition Coil 3 with Power Output Stage

N292 Ignition Coil 4 with Power Output Stage

N323 Ignition Coil 5 with Power Output Stage

N324 Ignition Coil 6 with Power Output Stage

Z19 Oxygen Sensor (O2S) Heater

Z29 Oxygen Sensor (O2S) 1 (behind Three Way Catalytic Converter (TWC)) Heater

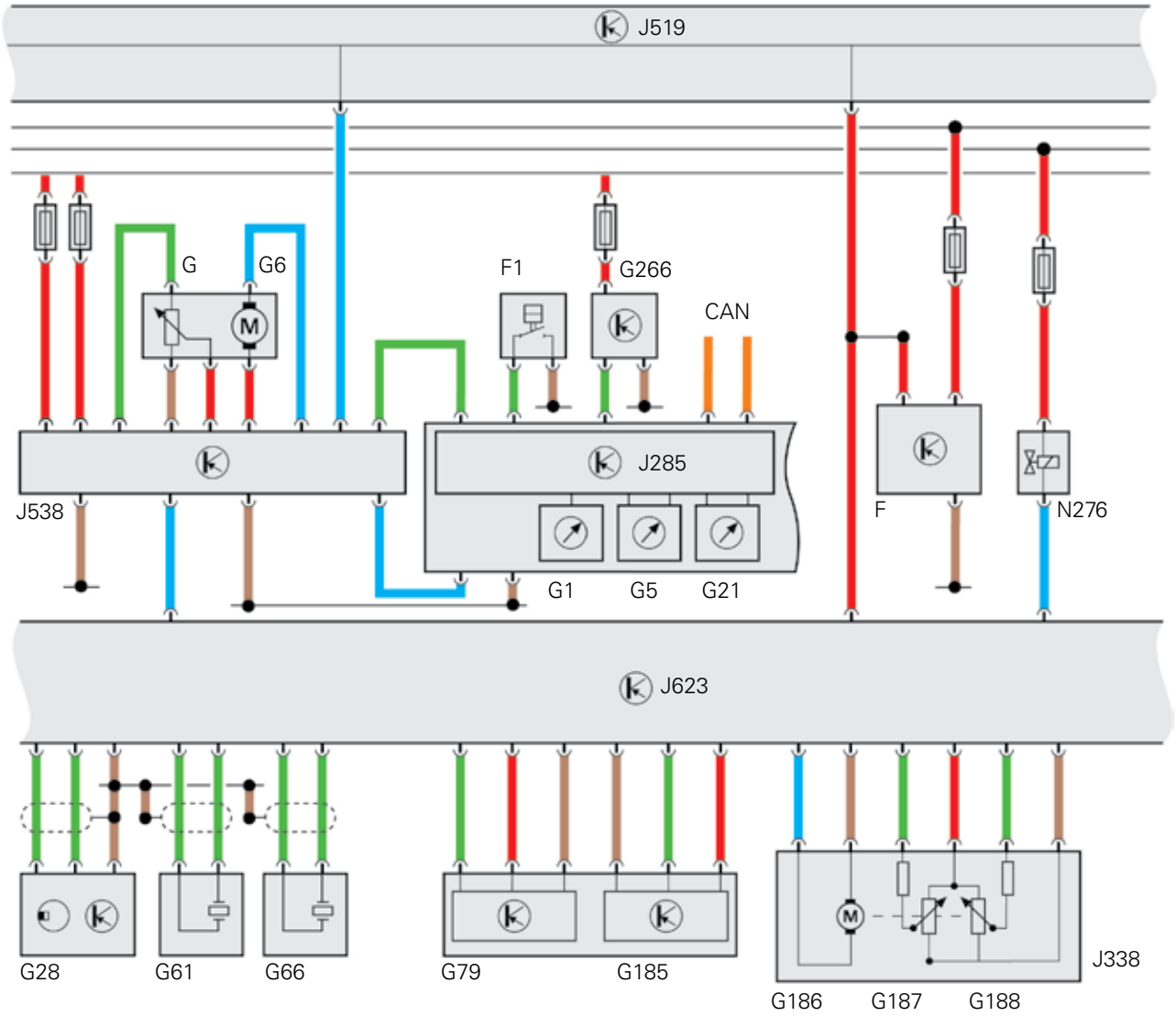

S360_166

F Brake Light Switch
F1 Oil Pressure Switch
G Fuel Level Sensor
G1 Fuel Gauge
G5 Tachometer
G6 Transfer Fuel Pump (FP)
G21 Speedometer
G28 Engine Speed (RPM) Sensor
G61 Knock Sensor (KS) 1
G66 Knock Sensor (KS) 2
G79 Throttle Position (TP) Sensor
G185 Accelerator Pedal Position Sensor 2
G186 Throttle Drive (for Electronic Power Control (EPC))
G187 Throttle Drive Angle Sensor 1 (for Electronic Power Control (EPC))
G188 Throttle Drive Angle Sensor 2 (for Electronic Power Control (EPC))
G266 Oil Level Thermal Sensor

J285 Instrument Cluster Control Module
J338 Throttle Valve Control Module
J538 Fuel Pump (FP) Control Module
J623 Engine Control Module (ECM)
N276 Fuel Pressure Regulator Valve

Operating Diagrams

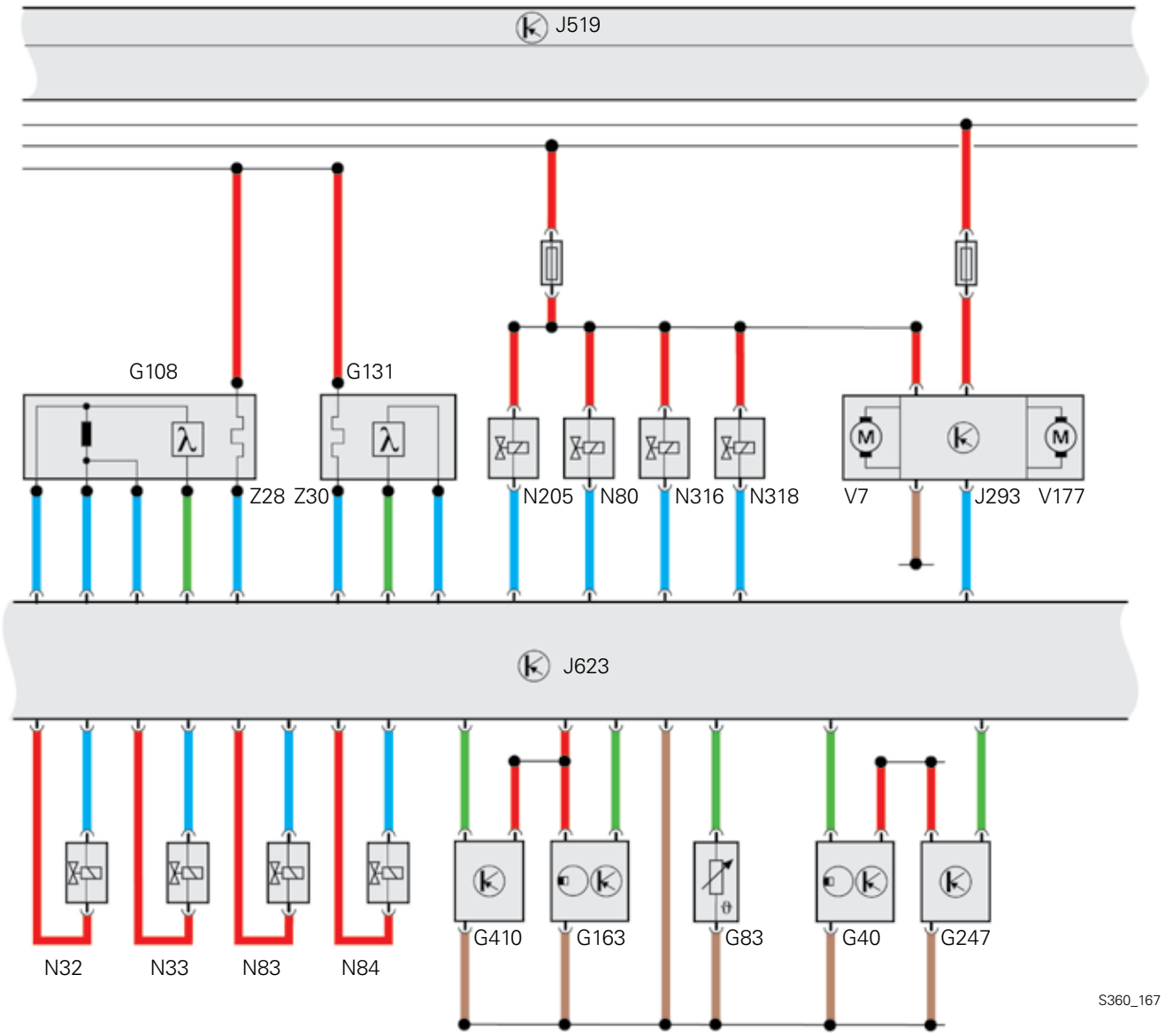

G40 Camshaft Position (CMP) Sensor
G83 Engine Coolant Temperature (ECT) Sensor (on Radiator)
G108 Heated Oxygen Sensor (HO2S) 2
G131 Oxygen Sensor (O2S) 2 Behind Three Way Catalytic Converter (TWC)
G163 Camshaft Position (CMP) Sensor 2
G247 Fuel Pressure Sensor
G410 Low Fuel Pressure Sensor
J293 Coolant Fan Control (FC) Control Module
J519 Vehicle Electrical System Control Module
J623 Engine Control Module (ECM)
N32 Cylinder 3 Fuel Injector
N33 Cylinder 4 Fuel Injector
N80 Evaporative Emission (EVAP) Canister Purge Regulator Valve
N83 Cylinder 5 Fuel Injector
N84 Cylinder 6 Fuel Injector
N205 Camshaft Adjustment Valve 1
N316 Intake Manifold Runner Control (IMRC) Valve
N318 Camshaft Adjustment Valve 1 (exhaust)
V7 Coolant Fan
V177 Coolant Fan 2

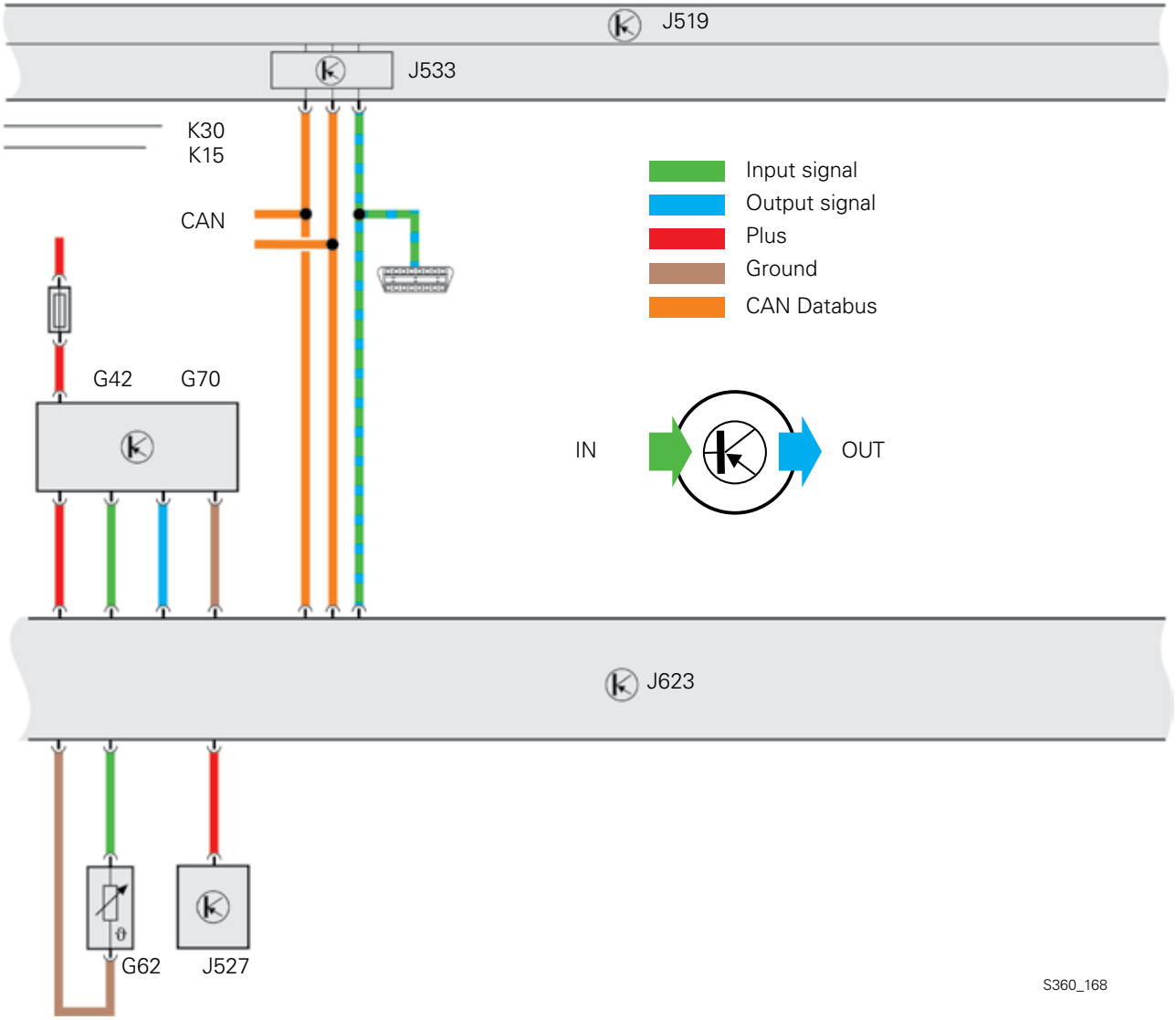

G62 Engine Coolant Temperature (ECT) Sensor
G42 Intake Air Temperature (IAT) Sensor
G70 Mass Air Flow (MAF) Sensor

J519 Vehicle Electrical System Control Module
J527 Steering Column Electronic Systems Control Module
J533 Data Bus On Board Diagnostic Interface
J623 Engine Control Module (ECM)

Z28 Oxygen Sensor (O2S) 2 Heater
Z30 Oxygen Sensor (O2S) 2 (behind Three Way Catalytic Converter (TWC)) Heater

The operating diagram shows the 3.6-liter FSI engine in the Passat as an example.

Notes

Special Tools

Description	Tool	Use
Funnel T 10333	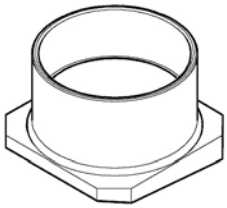	The Funnel T 10333 is used for installing the pistons on the 3.6 V6 FSI engine.
Funnel T 10343	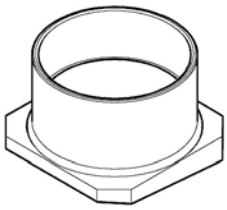	The Funnel T 10343 is used for installing the pistons on the 3.2 V6 FSI Engine.
Puller T10055 Adapter T 10055/3	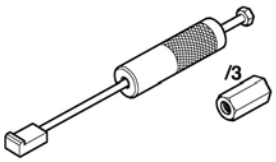	The Puller T10055 with Adapter T 10055/3 is used to remove the oil pump.
Tool Set T 10133 Puller T 10133/10	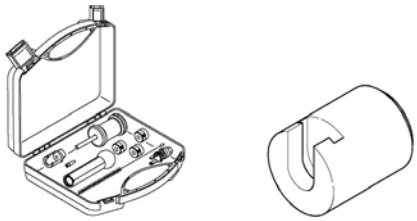	The Tool Set T 10133 with Puller T 10133/10 is needed to remove the fuel injectors.
Adjusting tool T 10332	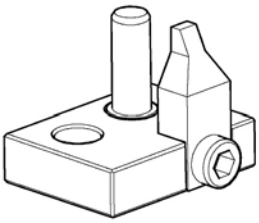	The Adjusting Tool T 10332 must be used to lock the pinion on the high-pressure fuel pump drive.

Notes

An on-line Knowledge Assessment (exam) is available for this Self-Study Program

You can find this Knowledge Assessment on your Certification Resource Center

at:

www.vwwebsource.com

From the vwwebsource.com homepage, do the following:

1. Click on the Certification tab
2. Click on "My Certification" tab
3. Click the Fulfill link next to this SSP
4. Click "Launch Assessment"

For assistance, please call:

Volkswagen Academy Concierge

1 – 877 – 791 – 4838

(8:00 a.m. to 8:00 p.m. EST)

Or, E-Mail:

concierge@volkswagenacademy.com

Volkswagen of America, Inc.
3800 Hamlin Road
Auburn Hill, MI 48326
Printed in the U.S.A.
October 2006