Self Study Programme 994617AG

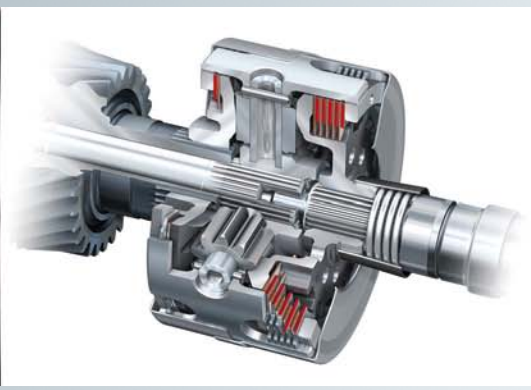

Audi RS 5 ’10 and RS 4 Avant ’13 Power transmission

quattro drive with crown-gear centre differential and torque vectoring

Audi
Service Training

The material in this Self Study Program (SSP) may contain technical information or reference vehicle systems and configurations which are not available in the Canadian market.

Please ensure you reference ElsaPro for the most current technical information and repair procedures.

Traction on a high level:
quattro drive with crown gear centre differential and torque vectoring

As with every RS model, the Audi RS 5 ’10 and the Audi RS 4 Avant ’13 employ the quattro full-time all-wheel drive to put the power from the 331 kW (450 HP) engine down onto the road. Both models have identical drivelines. An evolutionary version of the centre differential is utilised – the so-called crown gear centre differential.

This compact and lightweight component has the ability to distribute power flow between the front and rear axles instantaneously, homogeneously and over a broad range; up to 70 percent can flow to the front axle and up to 85 percent to the rear axle.

617_027

The crown-gear limited slip differential works in conjunction with the torque vectoring system, which acts on all four wheels. If a wheel on the inside of the curve loses too much traction under dynamic driving conditions, the torque vectoring system brakes the wheel before unwanted levels of slip occur. Audi also offers the sports differential option, a mechanism that uses two overlapping ratios to actively distribute the power between the rear wheels.

Power transmission is provided by the sporty 7-speed dual clutch gearbox 0B5 S tronic. In the case of the Audi RS 5 ’10 and Audi RS 4 Avant ’13, this gearbox has special characteristics which are explained in this Self Study Programme.

617_028

Contents

Introduction

Power transmission at a glance 4
quattro drive 6
Crown-gear differential – Torque vectoring 6
Rear axle final drive unit 0BF – sports differential 7
Changing the ATF and axle oil 7

Crown-gear differential

Crown-gear differential – Design and function 8
Asymmetric basic torque split 9
Asymmetric-dynamic torque split 10
Operating instructions 11

Special features of the 0B5 gearbox

Splined prop shaft 12
ATF filter (pressure filter) 14
Changing the MTF 16
MTF temperature monitoring function 18
Gear oil temperature sensor 2 G754 18
MTF temperature collective 20
Temperature intervals 20
Cooling function 21
Safety function 21
Selector mechanism 22

Torque vectoring

Introduction 24
Working principle and function 25

Annex

Test your knowledge 28

The Self Study Programme teaches a basic understanding of the design and mode of operation of new models, new automotive components or new technologies.
It is not a Repair Manual! Figures are given for explanatory purposes only and refer to the data valid at the time of preparation of the SSP.
This content is not updated.
For further information on maintenance and repair work, always refer to the current technical literature.

Information

Reference

Introduction

Power transmission at a glance

The latest generation of the quattro drive with crown-gear differential and torque vectoring was premiered on the Audi RS 5 and also imparts a high level of driving dynamics to the Audi RS 4 Avant.

The S tronic (7-speed dual clutch gearbox 0B5) combines sportiness, dynamics and ride comfort with excellent overall efficiency. It is the ideal gearbox for both RS models.

The operating logic of the selector for the sport program (speed S) has been reconfigured (refer to page 22).

The 7 speed dual clutch gearbox 0B5 S tronic is described in detail in Self Study Programme 429 "Audi Q5 – Engines and Transmissions". There are currently seven Audi Service TV programmes from which you can obtain more information. You can find all of these programmes using the search string "0B5".

Special characteristics and new features of the 7 speed dual clutch gearbox 0B5 – S tronic

Several modifications came into effect from week 22/2010
The key modifications relevant to servicing are explained below.

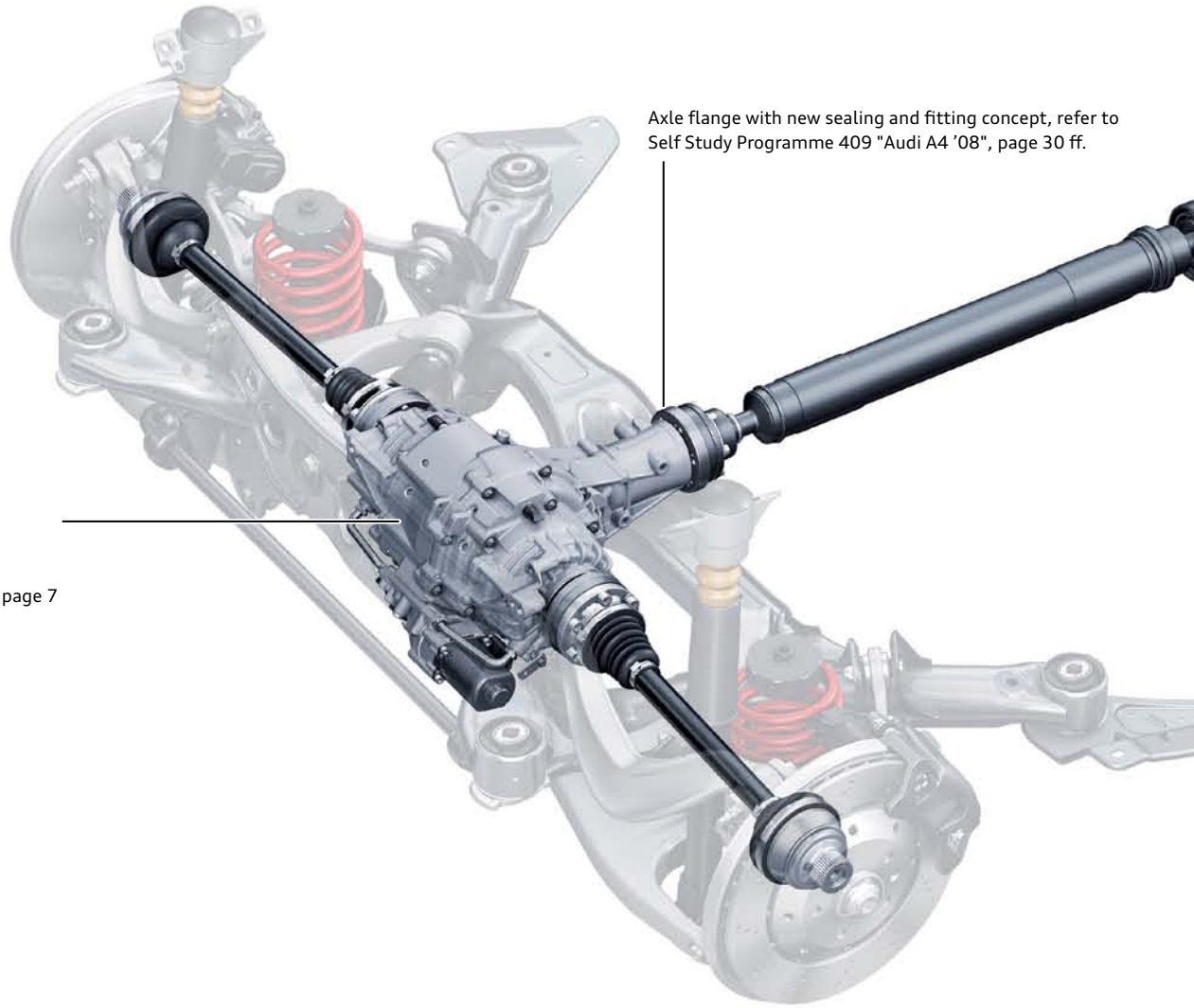

Rear axle final drive
Optional:
Rear axle final drive 0BF – sports differential – refer to page 7
Standard:
Rear axle differential 0BC

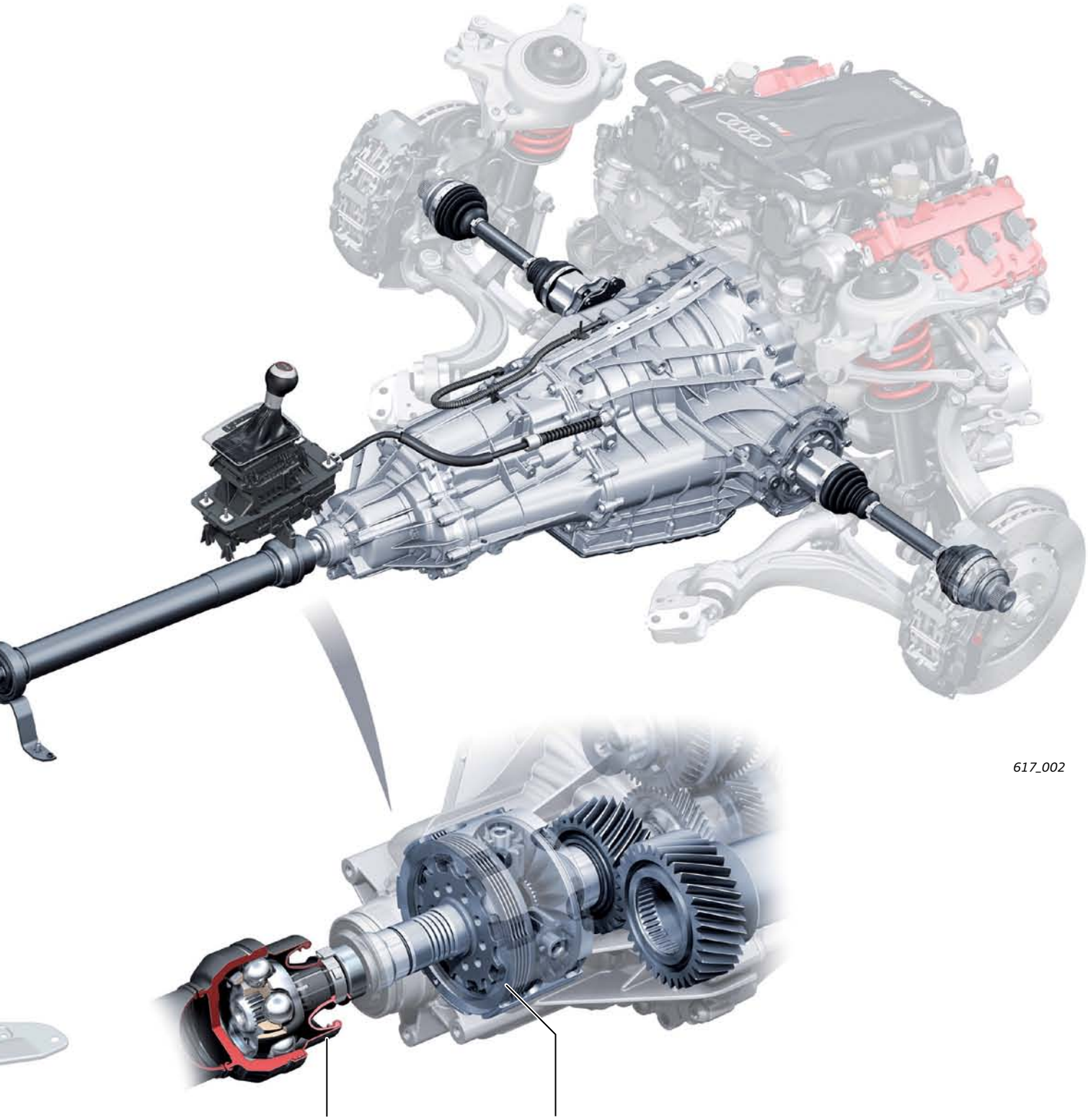

Reference

The drive concept of the Audi RS 5 and Audi RS 4 Avant is identical to that of the B8 series (Audi A4/A5) in many respects. For information about the axle position and the new sealing and fitting concept of the axle flange for the rear axle differential, please refer to Self Study Programmes 392 "Audi A5" and 409 "Audi A4 ’08", as well as the Audi Service TV programme "Audi A5 Power Transmission" (broadcast on 02.2010). This information also applies to the Audi RS 5 and Audi RS 4 Avant and constitutes basic knowledge on this topic.

quattro drive

To celebrate the 30th anniversary of the quattro in 2010, Audi unveiled a new evolutionary stage of its full-time all-wheel drive for longitudinally mounted engines on the **Audi RS 5 – the quattro drive with crown-gear differential and torque vectoring.** With not one, but two innovative in-house developments, Audi continues to extend its lead over the competition.

These innovative technologies were first showcased on the Audi RS 5 high-performance coupe. The Audi RS 4 Avant also employs this quattro drive concept. There are iTV programmes showcasing these technologies for the Audi RS 5 (3rd and 4th quarter 2010).

Crown-gear differential – Torque vectoring

The crown-gear differential belongs – like its predecessor – to the category of limited slip centre differentials with asymmetric-dynamic torque split. It surpasses its predecessor with its improved dynamic torque split – which gives better traction – and better integratibility with electronic brake control systems. Other strong points of the crown-gear differential are its compactness and low weight.

At 4.8 kilograms, it is two kilograms lighter than the previous unit. The basic torque split is 60 percent to the rear axle and 40 percent to the front axle. In the dynamic operating range (asymmetric-dynamic torque split), the differential distributes up to 85 of torque to the rear axle and up to 70 percent to the front axle.

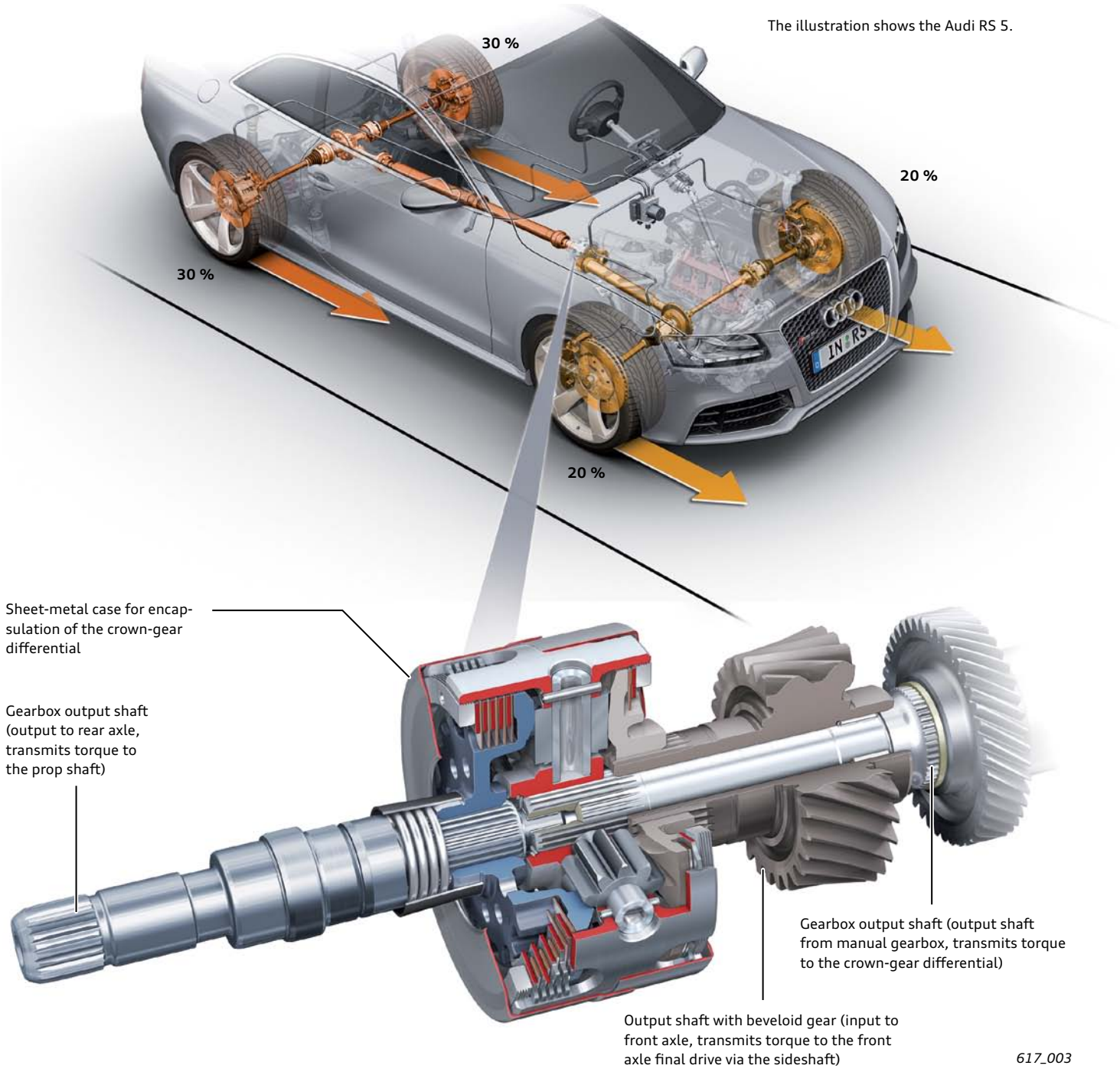

Torque vectoring

Audi pairs the crown-gear differential with a torque vectoring system. This software, specially developed by Audi, is integrated in the ESC control unit. Torque vectoring is an evolutionary form of the electronic differential lock (EDL) as seen on front wheel drive models.
A new feature is that each of the four wheels can be correctively braked. When cornering at high speeds, the ESC control unit determines the reduced load on the wheels on the inside of the curve and the increased load on the wheels on the outside of the curve.

From this information, it can determine the possible drive power for each individual wheel with a relatively high degree of accuracy. Drive torque is transferred to the wheels on the outside of the curve by controlled braking intervention. The result is improved driving dynamics. The vehicle's response remains neutral for longer, i.e. understeer is largely prevented when turning into corners and accelerating, and the ESC system intervenes later – assuming it is even needed.

For more information, please refer to page 24.

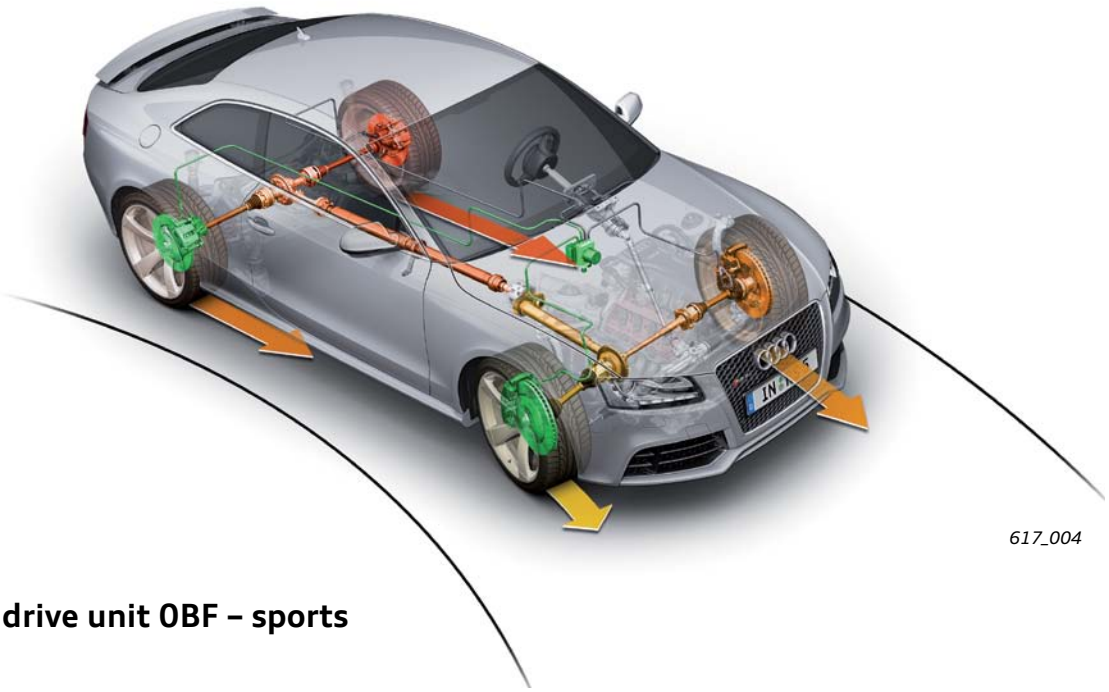

617_004

Rear axle final drive unit 0BF – sports differential

Everyone defines "driving" differently. Those who want to experience the full driving dynamics of the Audi RS 5 or the Audi RS 4 Avant, the sports differential is a good choice in addition to other optional systems designed for enhanced driving dynamics.

Changing the ATF and axle oil

RS models often have to withstand the harsh conditions of motor racing. In such cases, not only the components but also the oils are put under enormous stress. For that reason, special guidelines apply to RS models regarding servicing work and intervals.

The following guidelines are currently valid for the sports differential on the Audi RS 5 and Audi RS 4 Avant:

- The oil change interval for axle oil is every 60,000 km.
- The ATF must be changed every 60,000 km or earlier if the time limit on the MTF temperature meter of 7-speed dual clutch gearbox 0B5 has expired. For more information, please refer to page 20 ff.

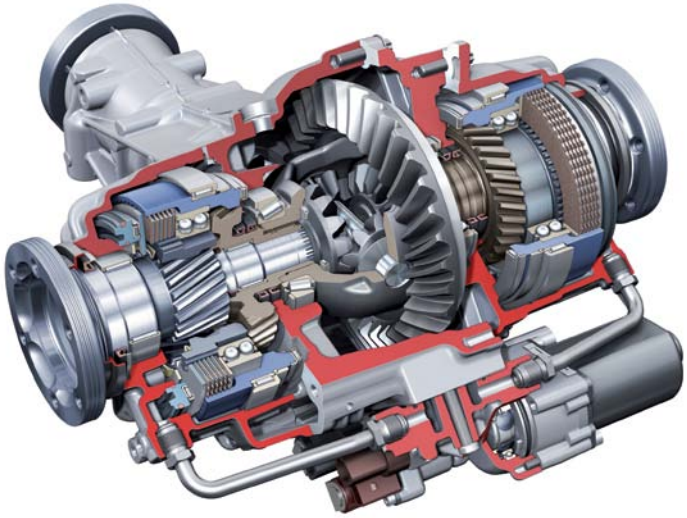

617_005

Reference
For detailed information on the sports differential, please refer to Self Study Programme 476 "Rear axle final drive unit 0BF/0BE – Sports differential" and the relevant Audi Service TV programmes (there are currently four). Please refer to the current workshop literature for detailed information on the oil change intervals.

Crown-gear differential

Crown-gear differential – Design and function

Basically, the limited slip centre differential is a crown-gear differential comprising two crown gears and four cylindrical spur gears which transmit drive torque and act as differential gears. This configuration closely matches that of the bevel gear differential as used in the final drive of a gearbox.

A special feature of this differential is that both crown gears have different reference diameters[1]. This provides the desired asymmetric torque split. The cylindrical differential gear shafts are mounted in bearings in the differential case.

On the back of both crown gears there is a multi-plate clutch which meshes with the corresponding crown gear. The inner plates of both multi-plate clutches engage the crown gears while the outer plates engage the differential casing.
Threaded rings act as the counter-bearings of the multi-plate clutches and close the crown-gear limited slip differential.

The gearbox output torque is transferred to the differential case. Four shafts transmit the torque to the differential gears, which in turn transmit torque to both crown gears; one sends the torque to the front axle and the other to the rear axle. The displacement forces in the gearing travel through the crown gears to produce an axial force which acts on the multi-plate clutches. The multi-plate clutches produce the desired lock-up effect in the differential.

Background

To understand the power distribution scheme of the crown-gear limited slip differential, one must consider two effects – **basic torque split** and **dynamic torque split**. When driving, the dynamic torque split is always superimposed on the basic torque split.

The crown-gear differential is designed in such a way that different amounts of drive power are transmitted to the differential outputs (front axle and rear axle). This is referred to as an "asymmetric torque split".

An asymmetric limited slip centre differential is defined by four operating states:

- Maximum distribution to the front axle under throttle
- Maximum distribution to the front axle during overrun
- Maximum distribution to the rear axle under throttle
- Maximum distribution to the rear axle during overrun

In each of these four operating states, the differential has a different lock-up effect. The torque split in the above four operating states is defined at the design stage in order to provide the desired handling under throttle and during overrun.

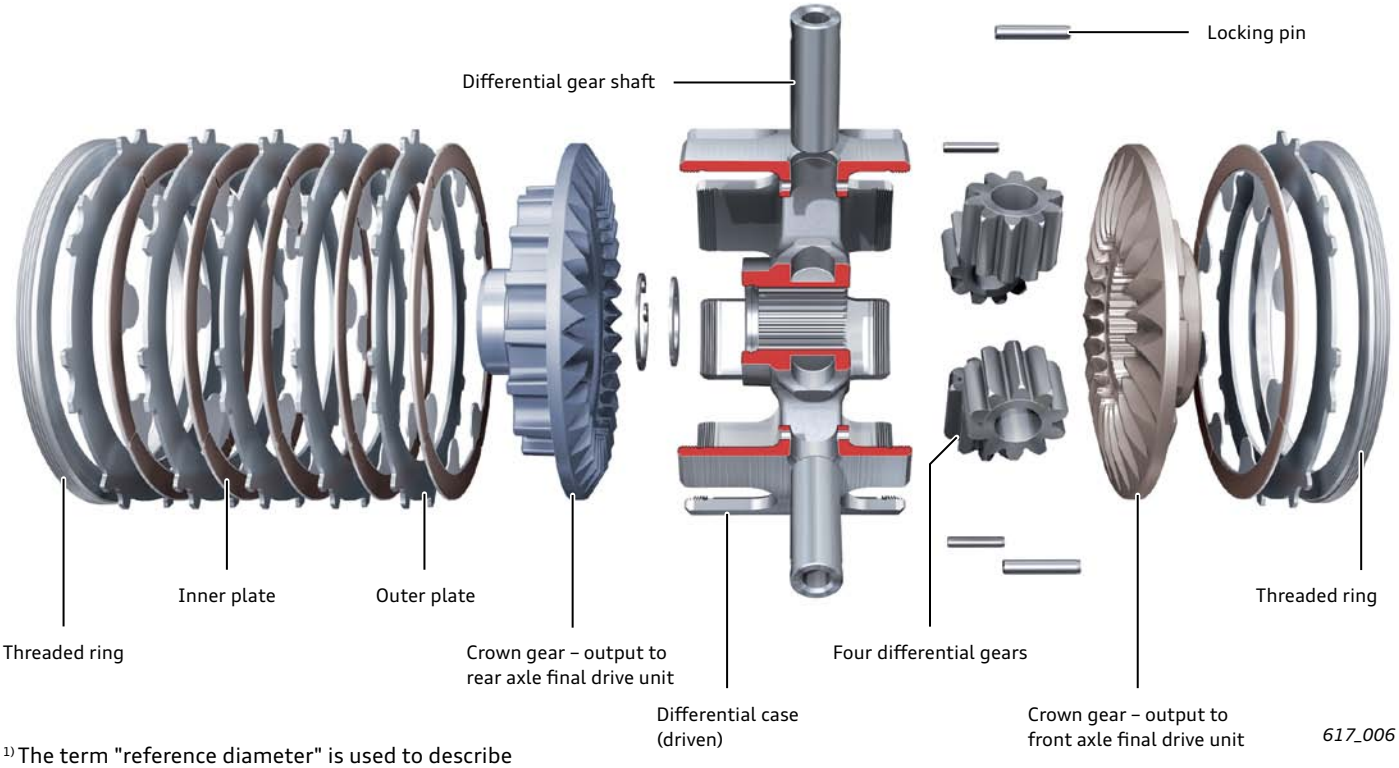

617_006

[1] The term "reference diameter" is used to describe the effective working diameter of a gear.

Information
The manufacturer uses threaded rings to eliminate clutch backlash and set a defined amount of clutch torque. The threaded rings are secured by spot welds to prevent twisting and cannot be detached. The sheet-metal housing is also welded, which means that non-destructive opening of the crown gear is not possible.

Asymmetric basic torque split

The different reference diameters[1] of the crown gears result in an asymmetric torque split. The number of teeth ratio is approximately 40 : 60, resulting in an asymmetric torque split of approximately 40 : 60 in favour of the rear axle. We refer to this torque split, which is defined by the geometry of the components, as the "asymmetric basic torque split".
The different reference diameters result in different leverages; input torque is transmitted with a ratio of approximately 60 : 40. This means that approximately 40 % of total drive torque is sent to the front differential and approximately 60 % to the rear differential.

The basic torque split is, in principle, effective in all operating states and is superimposed by the dynamic torque split. Together, they result in the asymmetric-dynamic torque split.

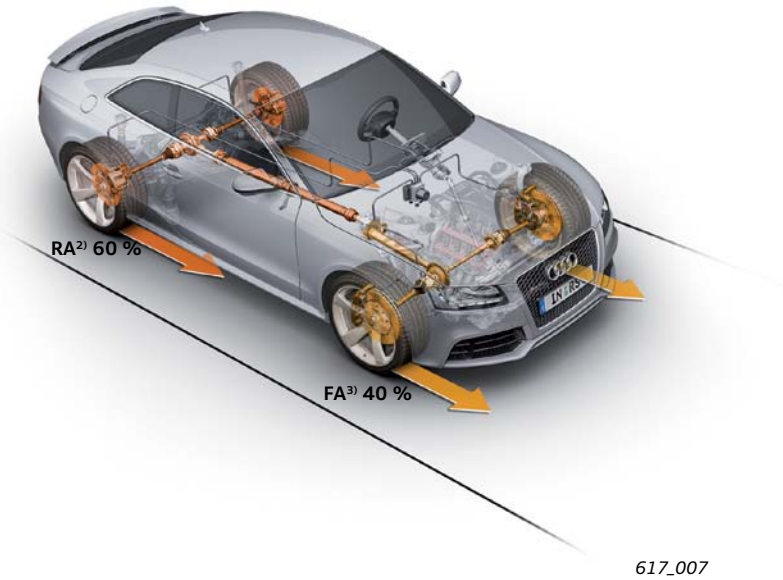

617_007

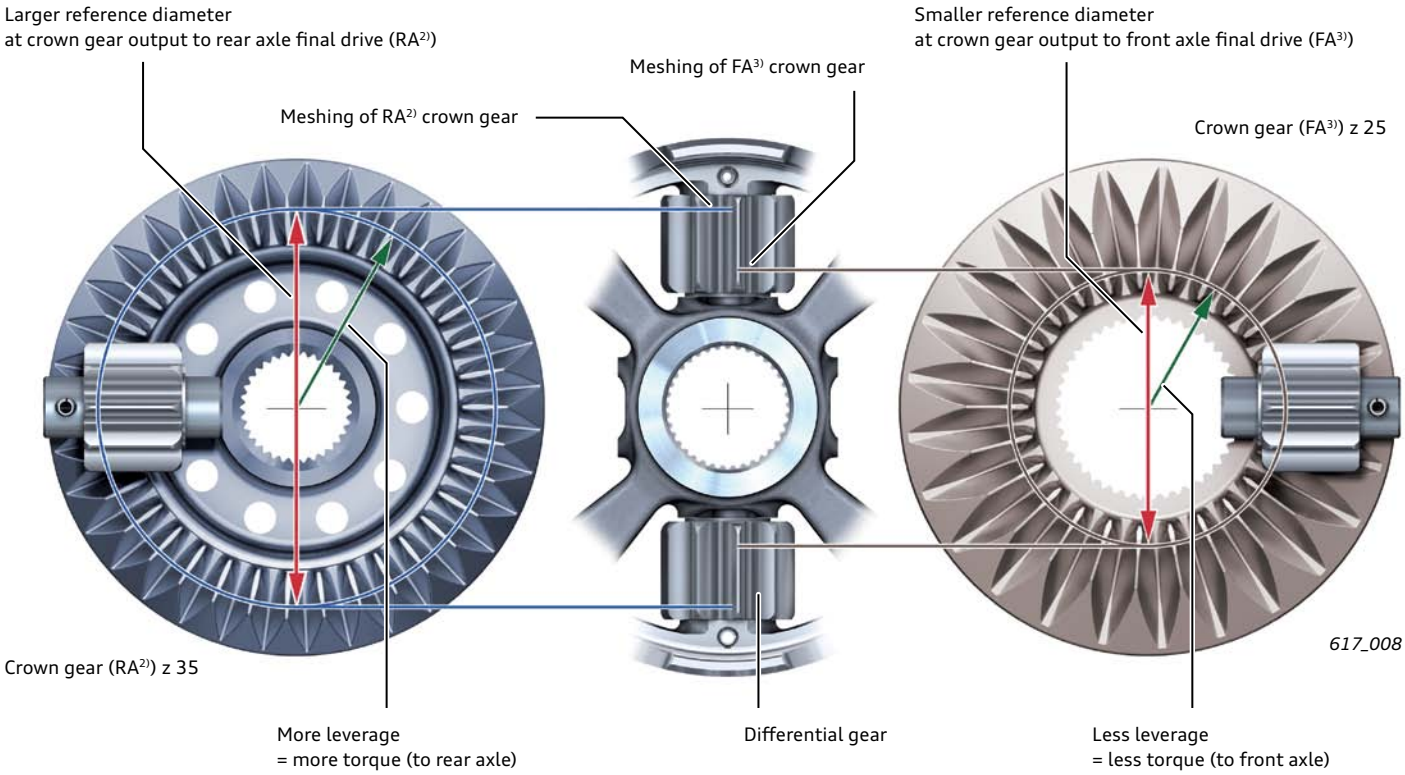

617_008

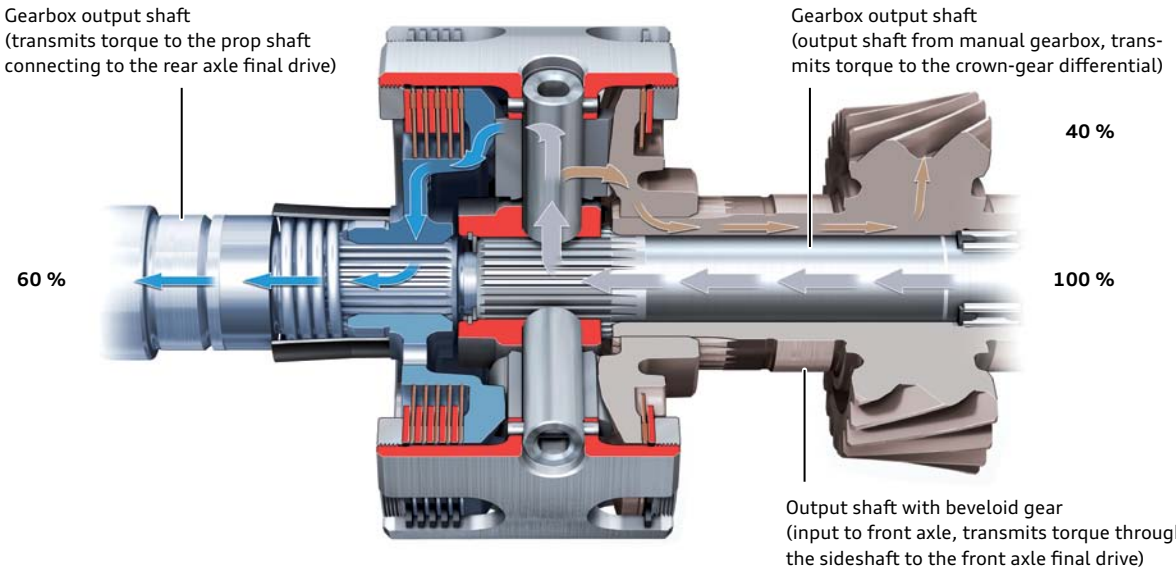

617_009

[2] Rear axle
[3] Front axle

Asymmetric-dynamic torque split

In addition to the asymmetric basic torque split of approx. 40 : 60, a locking torque proportional to the drive torque is produced in the differential. This locking torque plus the basic torque split gives the possible torque distribution to both axles.

Thus, the crown-gear differential locks up before any changes in traction between axles take effect. If an axle loses traction, drive torque is immediately diverted to the other axle within the allowable lock-up range and according to how much traction the wheels have. If the working range is exceeded, ESC intervention provides additional torque and, thus, forward thrust.

Function

As soon as torque is input into the crown-gear differential, an axial force occurs between the differential gears and the crown gears due to the tooth shape and the design of the differential. The tooth geometry gives rise to axial forces of differing magnitude at both crown gears.
Both crown gears are thrust in an axial direction and close the clutch plates. Depending on the axial force, this produces a clutch torque which positively connects the crown gears with the differential case.

This means that the clutch plate assembly is preloaded depending on the drive torque, thus producing a corresponding lock-up effect. The lock-up effect is defined by the lock-up value. The lock-up value describes the output torque differential at both outputs resulting from the lock-up effect of the differential.

15 : 85 torque split

If the front axle loses traction without yet exceeding the traction limit, the rear axle can transmit up to 85 % of drive torque.
If the traction limit is exceeded, more slip occurs at the wheels on the front axle.
When wheel slip exceeds a defined level, the ESC control system intervenes and provides additional torque. The additional torque, basic torque split and lock-up effect produce a corresponding drive torque at the rear axle.

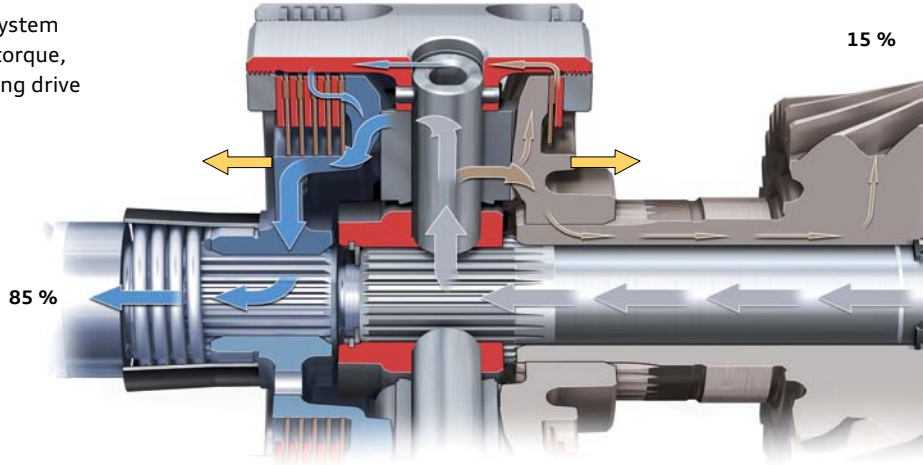

617_010

70 : 30 torque split

If the rear axle loses traction without yet exceeding the traction limit, the front axle can transmit up to 70 % of drive torque.
If the traction limit is exceeded, more slip occurs at the wheels on the rear axle.
When wheel slip exceeds a defined level, the ESC control system intervenes and provides additional torque. The additional torque, basic torque split and lock-up effect produce a corresponding drive torque at the front axle.

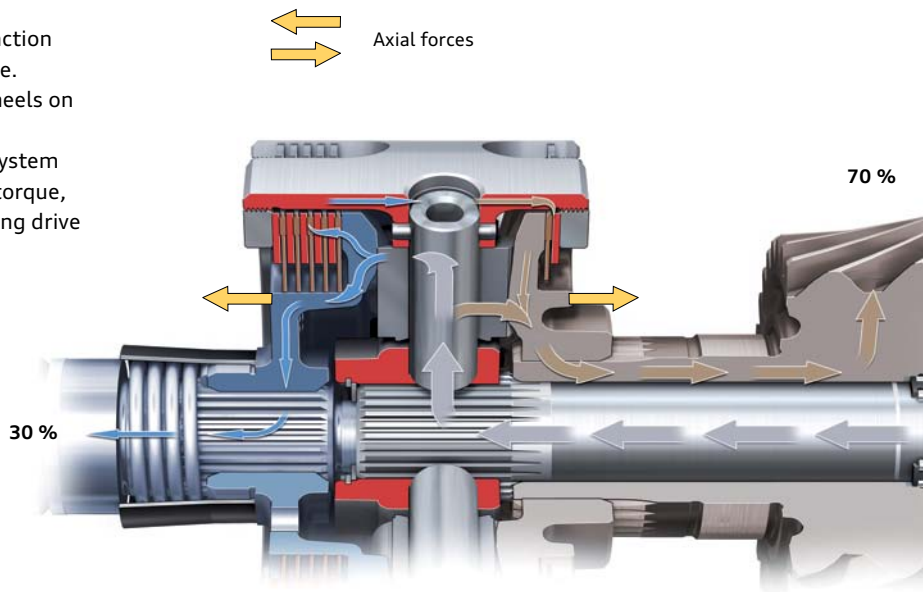

617_011

Operating instructions

The crown-gear limited slip differential operates fully independently, is maintenance-free and requires no input on the part of the driver.
In conjunction with torque vectoring, the quattro drive offers drivers a high standard of driving dynamics, safety and comfort. Nevertheless, there are a few points to note regarding the quattro powertrain.

- The crown-gear limited slip differential cannot be compared to a 100 % mechanical differential lock. If an axle or a wheel begins to spin, no drive will be available until the ESC has produced additional torque by brake intervention (EDL intervention). ESL does not intervene until it detects a defined engine speed differential and a corresponding engine torque. The driver must apply throttle selectively until ESC produces additional torque by brake intervention. The additional torque results in a drive torque at the tractive wheels. The crown-gear differential assists torque distribution in the way described above. To prevent the brake from overheating during heavy and prolonged ESL intervention, the EDL function is deactivated when the brake disc temperature exceeds a value computed by the ESC control unit. As soon as the brake has cooled down, the EDL function cuts in again automatically.

- Continuous synchronisation of high differential rotation speeds between the front and rear axles coupled with high engine load is harmful to the crown-gear differential.

- In the case of the Audi RS 5 and Audi RS 4 Avant, snow chains may only be fitted on certain rim-tyre combinations and only on the front axle. Please note the guidelines and specifications in the Owner's Manual and in the tyres/wheels catalogue.

- If the prop shaft has been removed, there is no or only minimal drive because sufficient additional torque cannot be developed in the centre differential.

- A performance test can/may only be performed on a four-wheel roller dynamometer.

- A brake test can be safely performed on a low-speed test bench (max. 6 kph). Drive must be provided by the dynamometer.

- The vehicle must not be towed with the front or rear axle elevated (refer to Owner's Manual).

Towing

If a vehicle with 0B5 gearbox needs towing, the conventional restrictions on automatic gearboxes apply:

- Selector lever in position "N"
- Max. towing speed 50 kph
- Max. towing distance 50 km

Reason:

When the engine is at standstill, the oil pump is not driven and certain parts of the gearbox are not lubricated.
Exceeding the max. towing speed of 50 kph results in unacceptably high rotational speeds in the gearbox and dual clutch because one gear is always engaged in both sub-gearboxes. If the towing conditions are ignored, serious gearbox damage can occur.

Reference
The working principle of the crown-gear differential is identical to that of the previous limited slip centre differential.
For more information of a general nature, please refer to Self Study Programme 363 "Audi Q7 – Transmission / Distributor Gear 0AQ", page 18 ff.

Special features of the 0B5 gearbox

Splined prop shaft

The innovative new prop shaft connector system was first used on the Audi A8 ’10. To fit the prop shaft on the gearbox, all that needs to be done is to slide on and secure the joint.
This connector system is not only 0.6 kg lighter but also saves a considerable amount of time during assembly and dismantling.
The spline connector will be adopted for all other gearboxes in the course of further development.

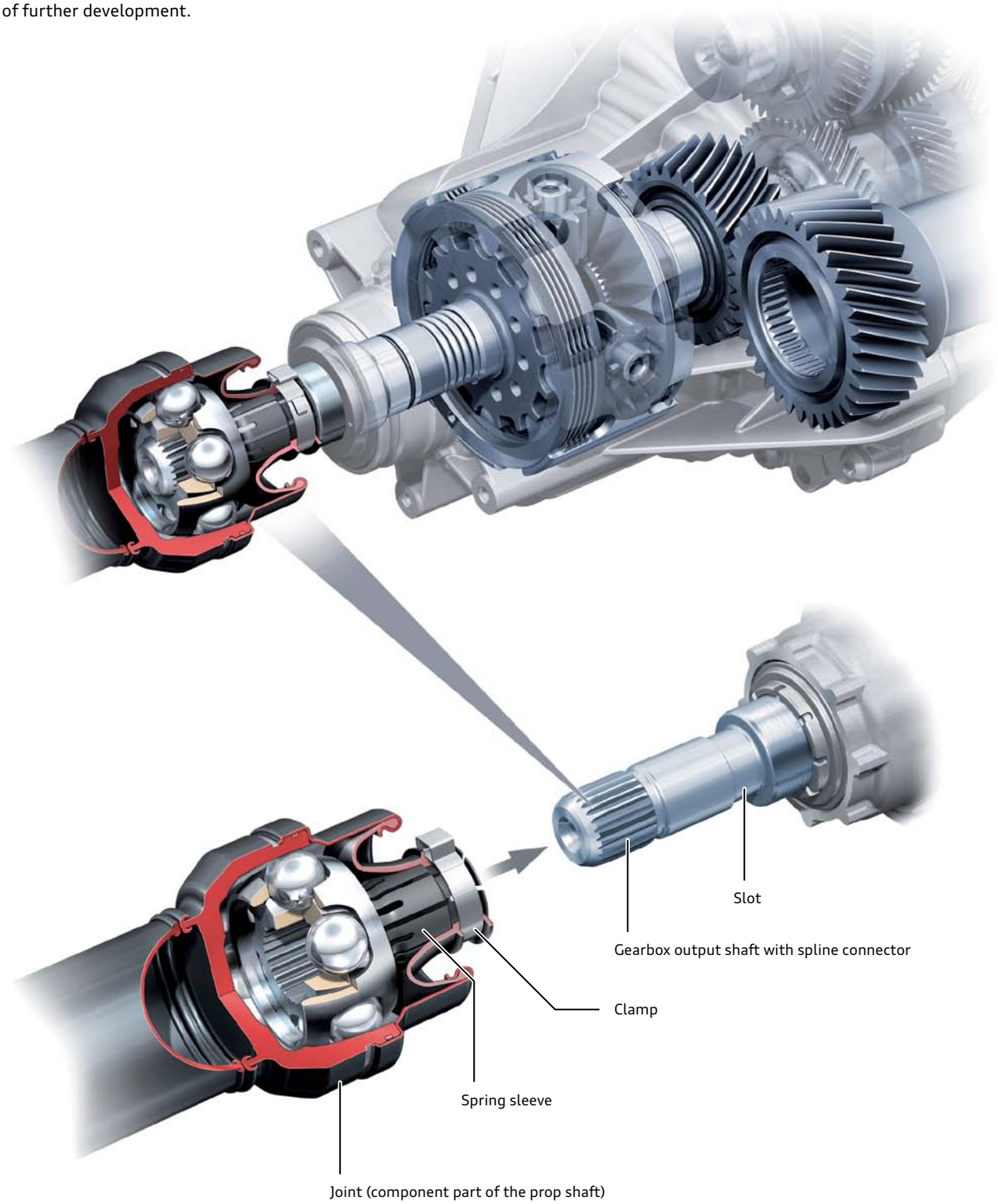

617_012

Information
The joint is an integral component of the prop shaft and cannot be replaced separately. The rubber boot can be replaced using a special tool.

Design and function

The spring sleeve is made of spring steel. On one side of the spring sleeve, there are spring elements with locking hooks. These locking hooks fix the spring sleeve in place in a slot in the joint hub.

On the other side of the spring sleeve, there are angled spring elements. They snap into the slot in the shaft stump when fitting the prop shaft.

617_013

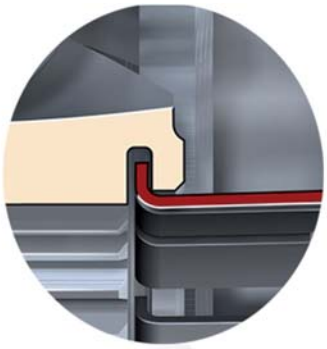

When the prop shaft is dismantled, the spring sleeve is held inside the joint hub by the spring force of the spring elements.

To make sure that the spring sleeve does not become detached from the joint hub, special attention must be given to correct positioning and fitting of the prop shaft.

Once the shaft stump has passed the locking hooks during fitting, the locking hooks are fixed in place and cannot slide out of the slot.

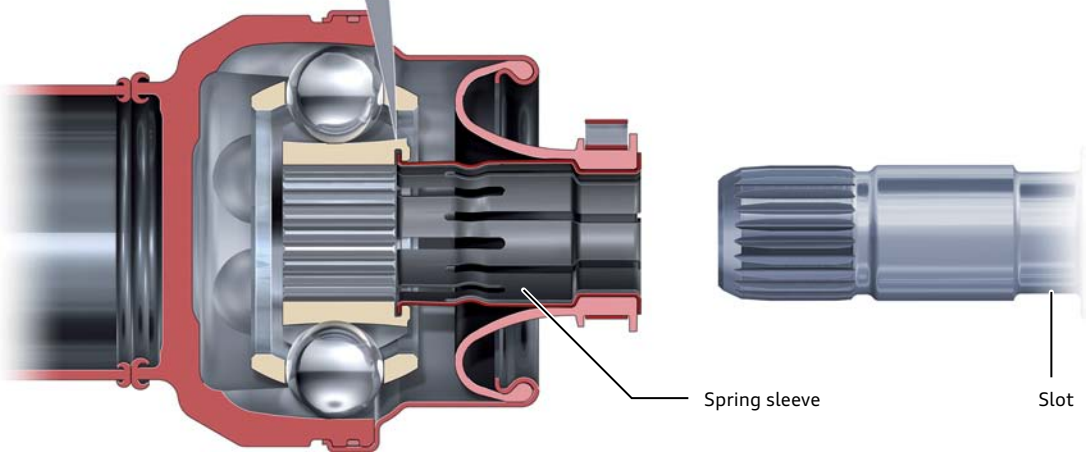

617_014

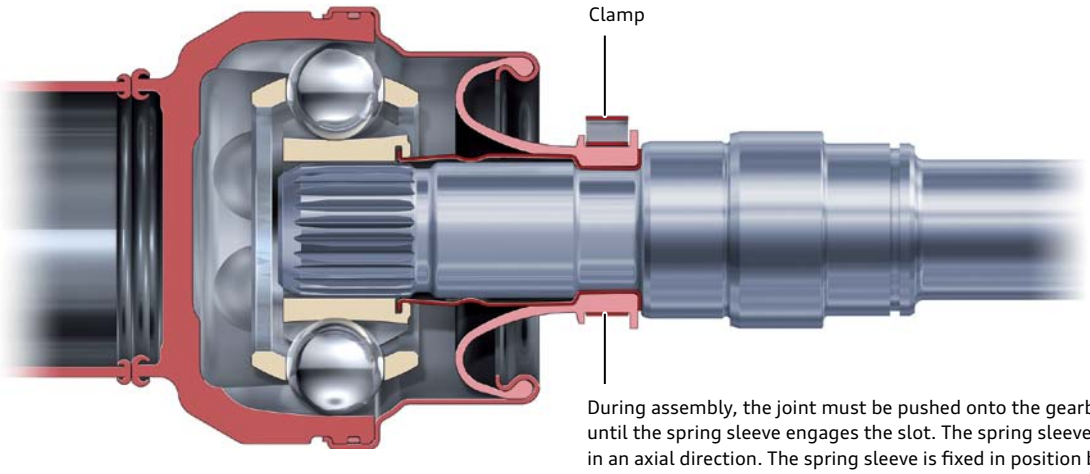

617_015

During assembly, the joint must be pushed onto the gearbox output shaft until the spring sleeve engages the slot. The spring sleeve secures the spline in an axial direction. The spring sleeve is fixed in position by a clamp thereby securing the prop shaft in an axial direction. In addition, the joint is sealed.

Reference
For more information and instructions for assembly of the splined prop shaft, please refer to the Audi Service TV programme – "Audi A8 Power Transmission Part 2".

ATF filter (pressure filter)

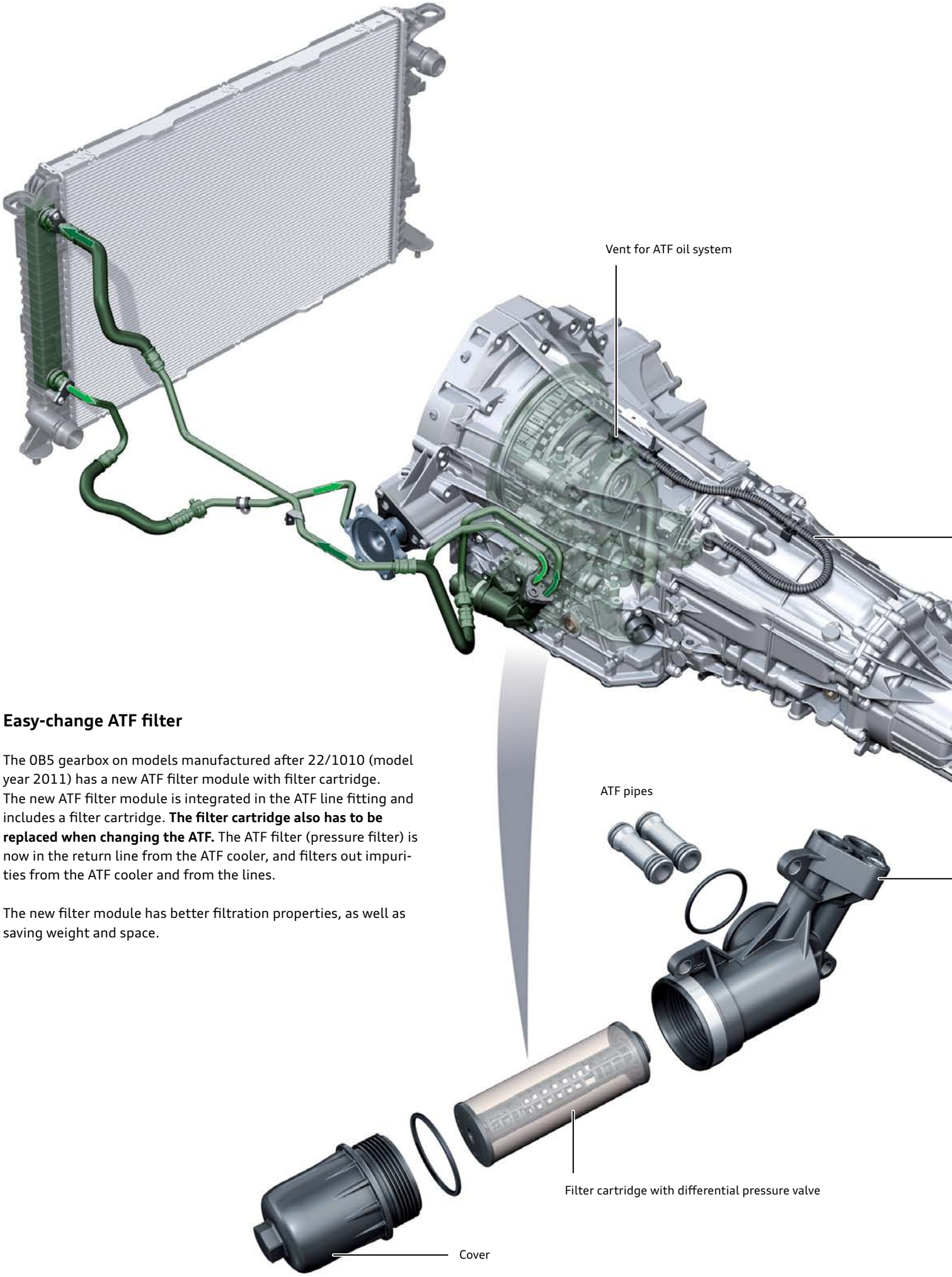

Easy-change ATF filter

The 0B5 gearbox on models manufactured after 22/1010 (model year 2011) has a new ATF filter module with filter cartridge. The new ATF filter module is integrated in the ATF line fitting and includes a filter cartridge. **The filter cartridge also has to be replaced when changing the ATF.** The ATF filter (pressure filter) is now in the return line from the ATF cooler, and filters out impurities from the ATF cooler and from the lines.

The new filter module has better filtration properties, as well as saving weight and space.

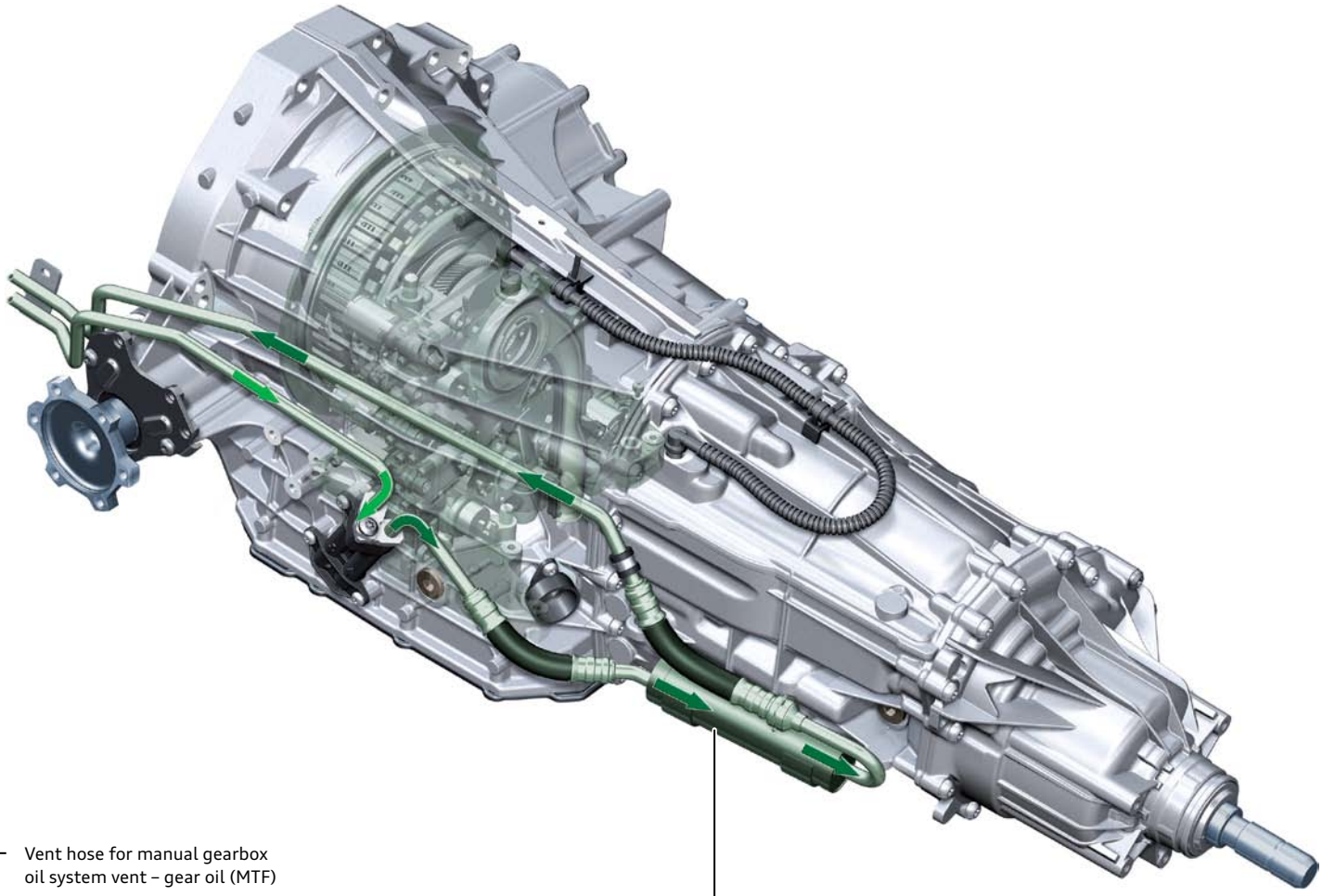

Vent hose for manual gearbox oil system vent – gear oil (MTF)

617_017

ATF line filter

On models manufactured prior to 22/2010, the ATF filter (pressure filter) is integrated in the supply line to the ATF cooler. The filter does not have a fixed maintenance interval.

617_016

Connections for ATF lines

Reference
For more information about the ATF filter module with filter cartridge, please refer to the Audi Service TV programme "7-speed Dual Clutch Gearbox 0B5: Servicing the ATF Filter".

Information
Keep the filter cartridge away from water. Even small amounts of moisture can cause filter fleece to dissolve. The dissolved filter fleece will then get into the mechatronics unit and cause it to malfunction.

There are various versions of the filter housing and the cover. Please read the information given in the ETKA and in the Workshop Manual.

Changing the MTF

The 0B5 gearbox on both RS models has to transmit up to 331 kW of engine power. If this power is demanded, the MTF[1] can become very hot.
The MTF contains special additives in order to withstand the stresses on the oil. These additives degrade at high temperatures and the oil loses its essential properties. This is why the MTF must be changed after it has been subjected to correspondingly high thermal loads, in order to avoid excessive wear or damage to the gearbox.

To determine the thermal load on the MTF, the 0B5 gearbox in RS models has an **MTF temperature monitoring function**.

In the case of the Audi RS 5 and Audi RS 4 Avant, the MTF currently has a general change interval of 30,000 km[2].
By comparison: The ATF must be changed every 60,000 km[2]. If the MTF temperature monitoring function determines a high thermal load on the MTF, the event memory entry "P0897 gear oil deterioration" is generated. In this case, it is necessary to change the MTF even if the vehicle has covered less than 30,000 km since the last MTF change.

Resetting the temperature meters after changing the MTF

After changing the MTF, it is important to reset the temperature meters of the temperature monitoring function.
The "Reset temperature meter" function is available for this purpose on the diagnostic tester.

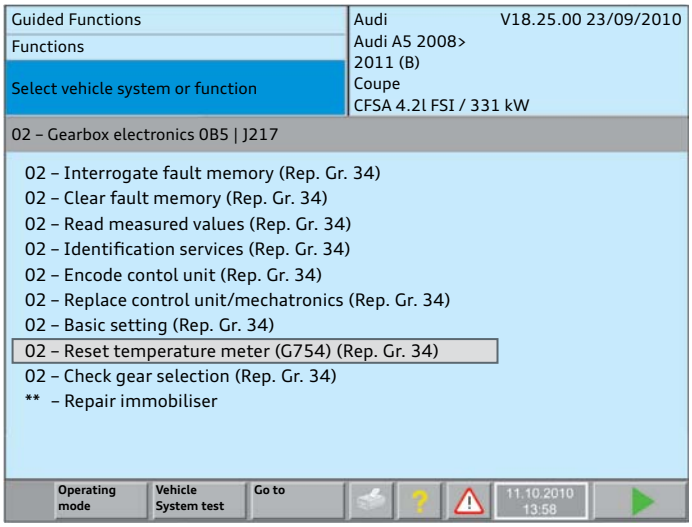

617_018

After the function is started, the system displays two temperature ranges and the time in minutes the MTF temperature was within each temperature range. In this example, 0 minutes is displayed which means that the MTF temperature has not yet reached a critical level. The temperature meters for the lower temperature ranges are not displayed here. For more information, please refer to page 20.
In the course of the menu, all temperature meters (including non-visible meters) are reset.
The temperature meters are also referred to as temperature intervals.

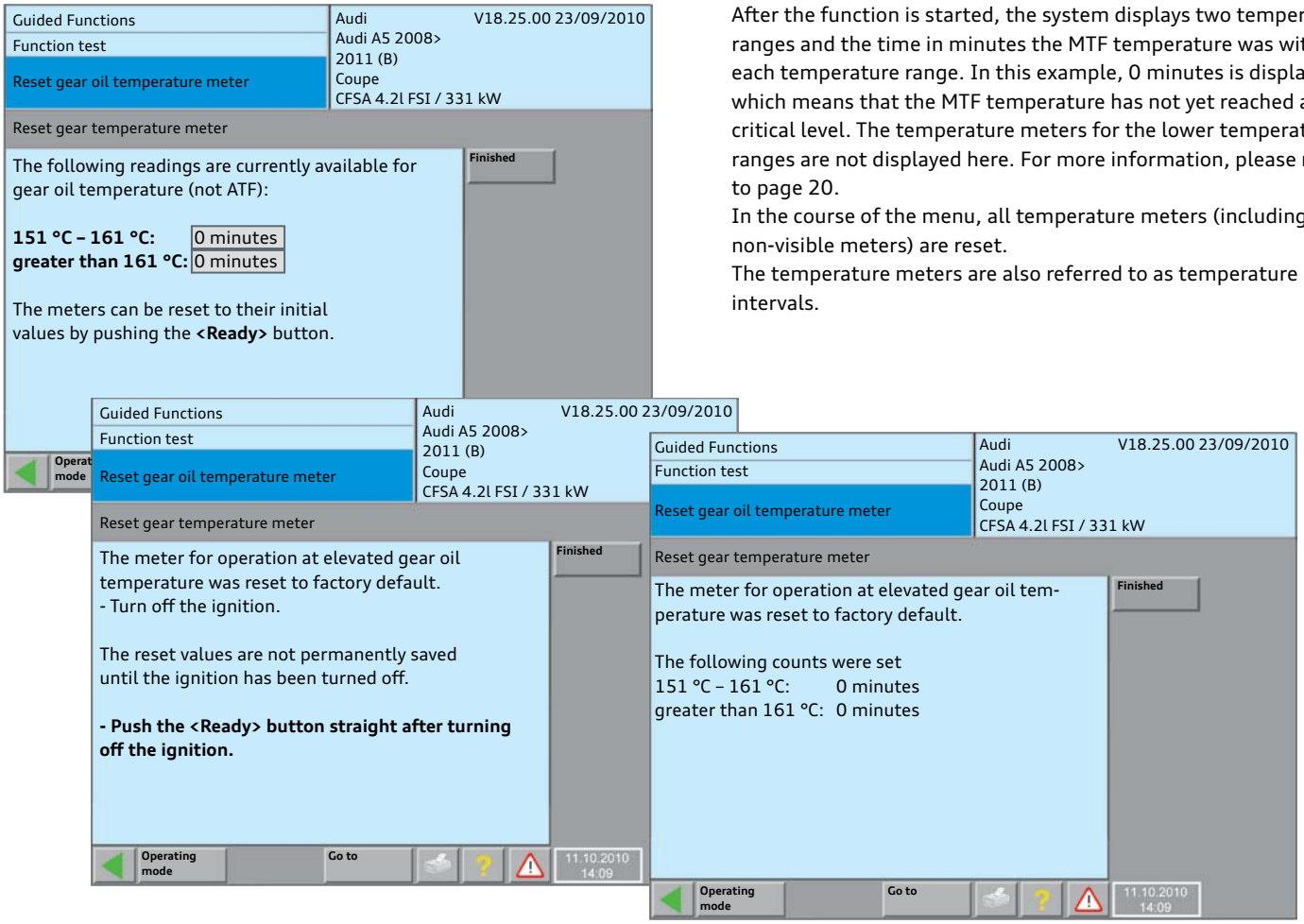

617_019

[1] MTF is the abbreviation for Manual Transmission Fluid and refers to the gear oil for the purely mechanical part of the gearbox. The oil system of the 0B5 gearbox lubricates the gear set, the front axle final drive and the transfer box including the centre differential.

[2] The specifications in "Strict Maintenance Operations" and/or the maintenance chart apply.

Oil systems – oil drain screws

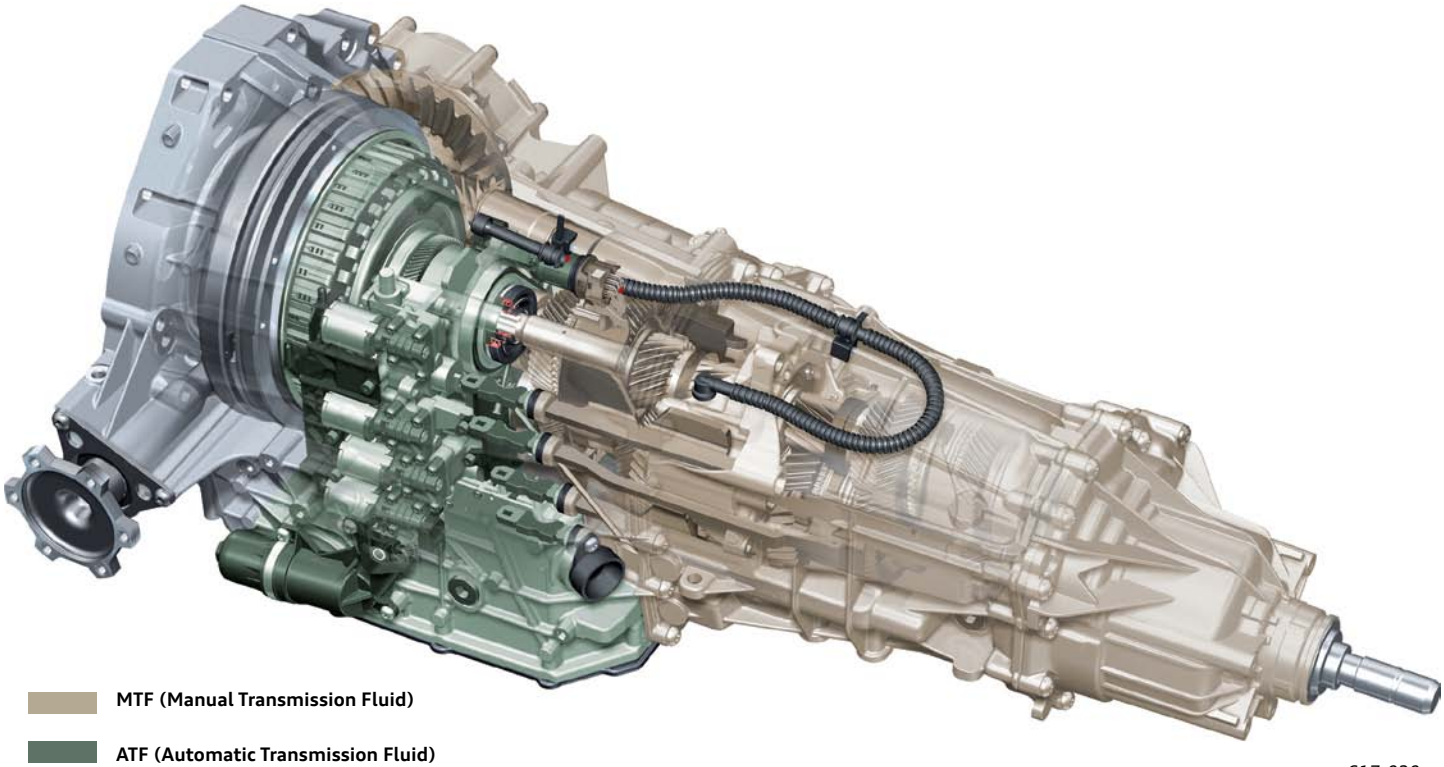

MTF (Manual Transmission Fluid)

ATF (Automatic Transmission Fluid)

617_020

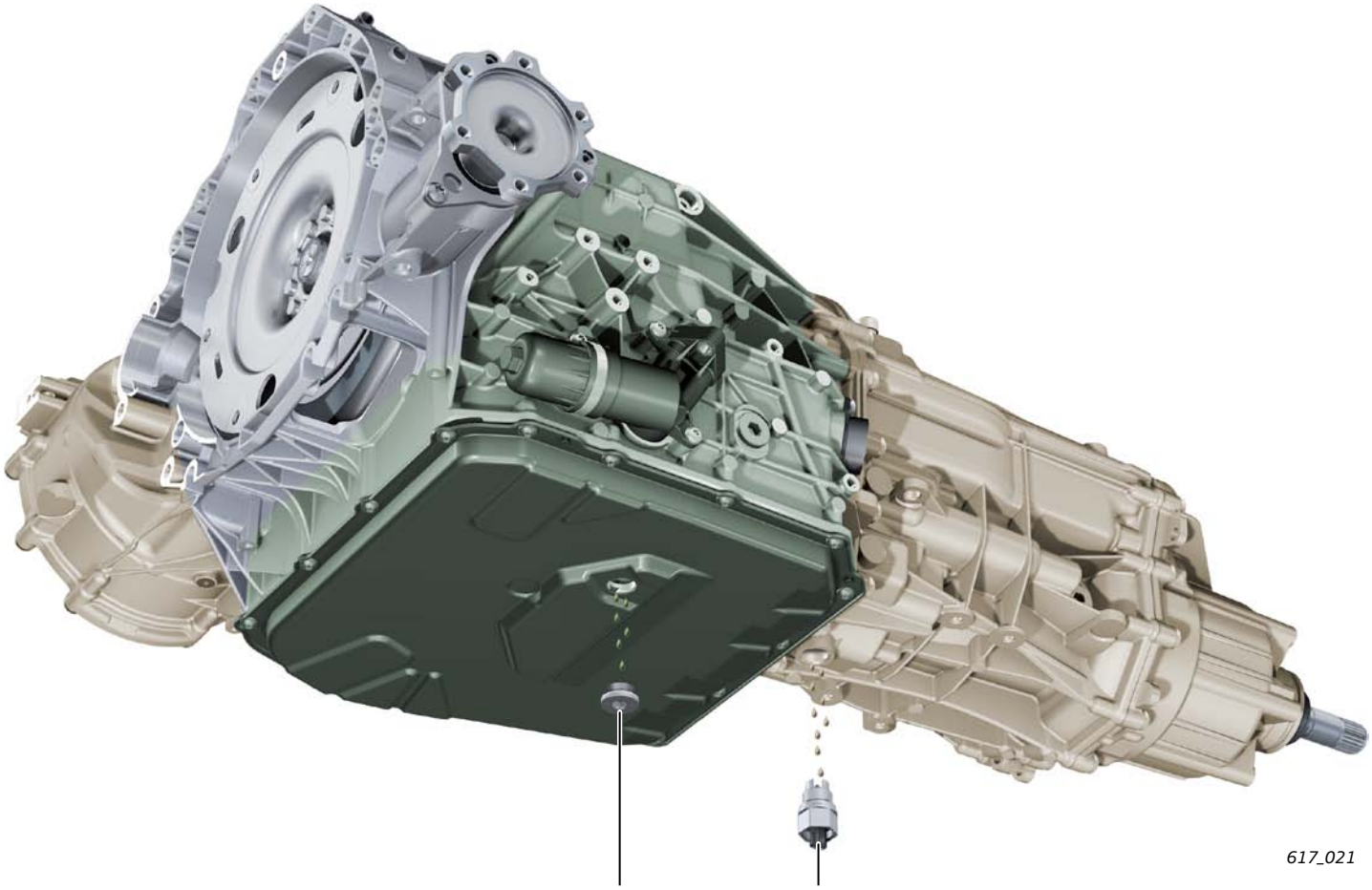

617_021

ATF drain screw

MTF drain screw with gear oil temperature sensor 2 G754 (version 2), see next page

Information

The sensor contacts can easily become exposed to MTF when draining the ATF. However, this should be avoided as the MTF contains phosphates and the contacts will corrode if they come into contact with MTF. If the sensor contacts are exposed to MTF, they must be thoroughly cleaned.

MTF temperature monitoring function

A special feature of the 0B5 gearbox in combination with the high-performance engines of the Audi RS 5 and/or the Audi RS 4 Avant is an MTF temperature monitoring function[1] which uses a separate temperature sensor (gear oil temperature sensor 2 G754) and evaluates the measured data generated by this sensor. For more information on this system, **please refer to MTF** temperature collective, page 20 ff.

[1] The 0B5 gearbox on the Audi S6 '12 and Audi S7 Sportback is also equipped with an MTF temperature monitoring system with gear oil temperature sensor 2 G754 (version 2).

MTF temperature monitoring is necessary for two reasons:

1. To determine the heat input into the MTF and hence the thermal ageing of the MTF (refer to Changing the MTF).

2. In the MTF oil system of the 0B5 gearbox there are plastic and electrical components, such as the gear sensor G676 and gearbox input speed sensors 1 and 2 (G632 and G612). These electrical and plastic components can become damaged and fail at excessively high temperatures.
   When defined temperature limits are exceeded, a so-called **cooling function** is activated in order to prevent the MTF temperature from rising any further. Event memory entries containing information on due servicing work (refer to page 16) are also generated.

Gear oil temperature sensor 2 G754

There are two versions of G754 and its installation location:

Version 1:

In the case of models manufactured prior to 2011, G754 is installed in the intermediate gearbox housing.

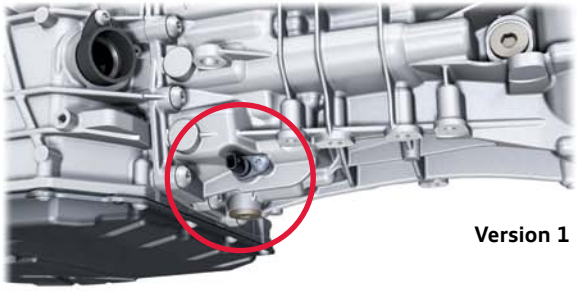

Version 1

617_038

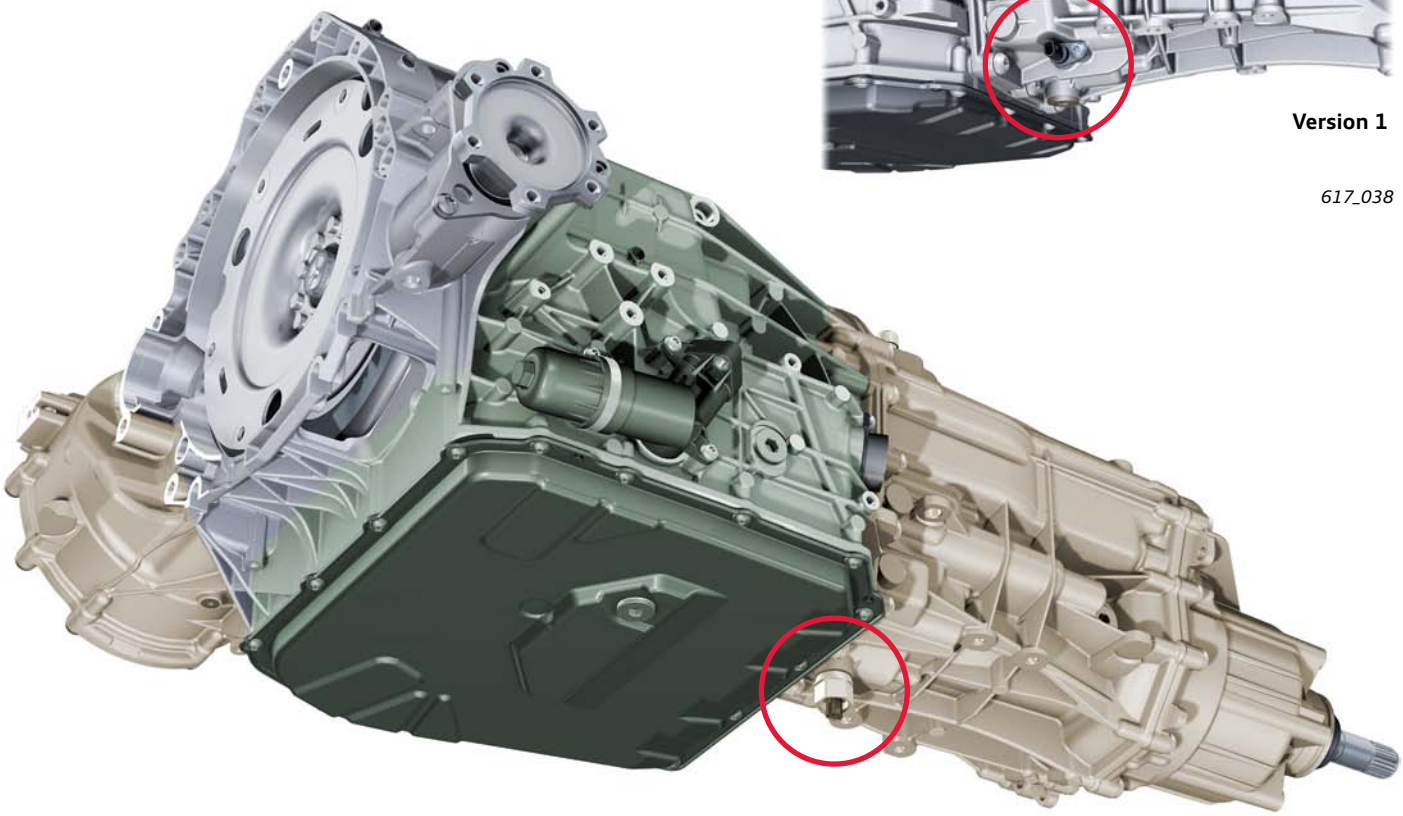

Version 2

617_022

Version 2:

In the case of models manufactured after 2011, G754 is integrated in the MTF drain screw.

Gear oil temperature sensor 2 G754 consists of an NTC resistor. NTC stands for "**N**egative **T**emperatur **C**oefficient" and refers to a resistor (component) whose electrical resistance (ohm) decreases as the temperature rises (thermistor).

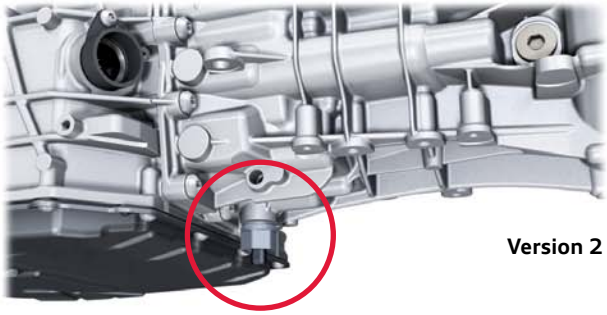

617_039

Information
In the case of version 2, note that the drain screw may drop into the oil or the contacts of G754 may come into contact with the MTF when changing the MTF (with G754). The MTF contains substances which can cause the contacts of G754 to corrode thereby falsifying the measured data.
If the contacts of G754 (or the connector) have come into contact with MTF, they must be thoroughly cleaned and dried before reconnecting the connector.

Measured value – MTF temperature

To read out the MTF temperature, the program "G754 – Gear oil temperature sensor 2, temperature" is available in the function/component selection menu. For better assessment of the measurement results, three temperatures are displayed in this program. No extreme deviations should normally occur between the three temperature values. The values should be mutually plausible. For example, it is not plausible for an MTF temperature of 80 °C to be displayed at the same time as an ATF temperature of 25 °C.

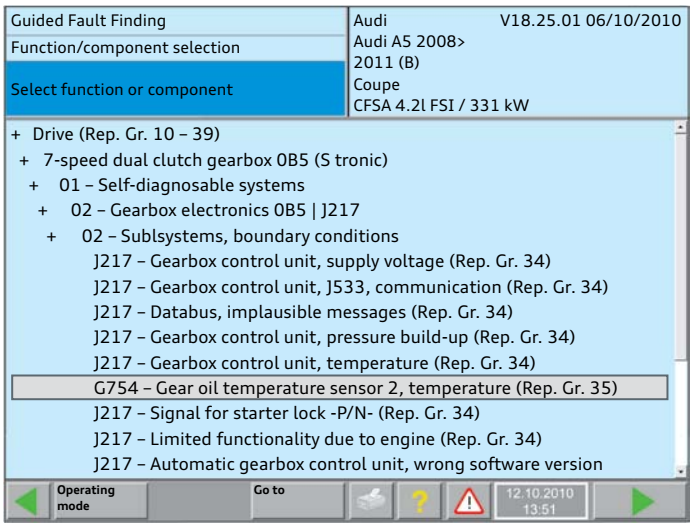

617_023

The gear oil in the gear set is the MTF (MTF temperature).

This ATF temperature is a value which is calculated by the gearbox control unit. It is calculated from the signals generated by the clutch temperature sensor G509 and by the temperature sensor in control unit G510. G510 is located directly on the PCB in the automatic gearbox control unit J217 (chip temperature).

The measured value generated by G509 is the ATF temperature of the cooling oil ejected from the dual clutches.

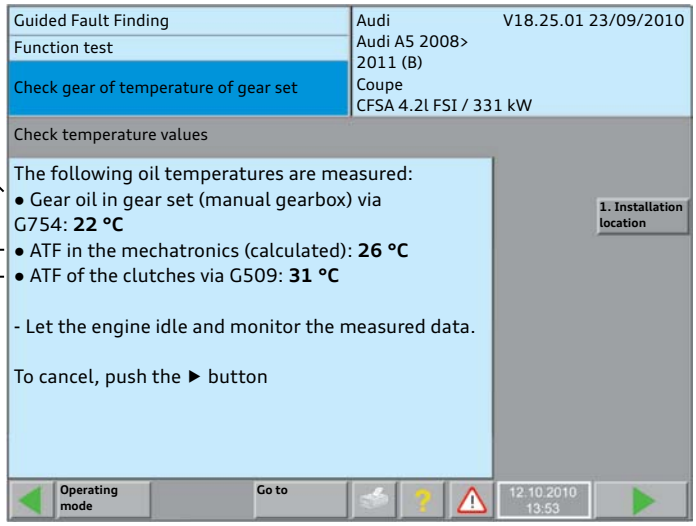

617_024

Reference
For more information on the ATF temperature sensors, refer to Self Study Programme 429 "Audi Q5 – Units".

MTF temperature collective

The gearbox control unit for the Audi RS 5 and the Audi RS 4 Avant has an additional software-based MTF temperature monitoring function. The MTF temperature monitoring function records and evaluates all measured values generated by gear oil temperature sender 2 G754.

These measured values are evaluated statistically in an MTF temperature collective. Five temperature ranges assigned to so-called temperature intervals are defined for the purposes of evaluation.
Each temperature interval has an elapsed-time meter which records the time the MTF temperature was in each temperature range. This gives a good indication of the extent to which the MTF and the components have been subjected to thermal load and/or stress.

Temperature intervals	
TEMP_INTERVAL_01	–60 °C – 120 °C
TEMP_INTERVAL_02	121 °C – 130 °C
TEMP_INTERVAL_03	131 °C – 150 °C
TEMP_INTERVAL_04	151 °C – 161 °C
TEMP_INTERVAL_05	>162 °C

Temperature intervals

The temperature intervals are displayed in the vehicle self-diagnostics for the measured values "Meter for operation at elevated gear oil temperature" and "Excess temperature meter".

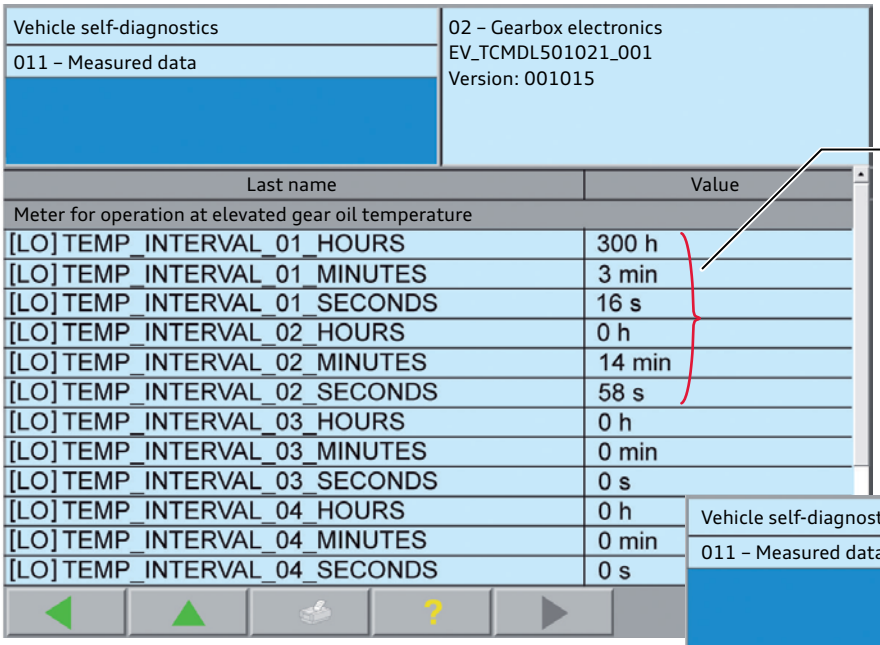

617_025

In this example, the MTF temperature was within temperature range 1 between –60 °C and 120 °C for 300 hours, 3 minutes and 16 seconds and within temperature range 2 between 121 °C and 130 °C for 14 minutes and 58 seconds.
The gearbox temperature has not exceeded 130 °C since the last time the temperature intervals were reset (refer to Resetting the temperature meter on page 16).

Temperature intervals 04 and 05 are important for temperature monitoring. A time limit is defined for each of these temperature intervals. The time limits are 2 hours for temperature interval 04 and 10 minutes for temperature interval 05.

If the time limit for either of these temperature intervals is exceeded, the event memory entry "Gear oil deterioration" is generated in the gearbox control unit.

No message or warning is issued via the instrument cluster.

If this event memory entry is generated, it is necessary to change the MTF. Don't forget! The temperature meters (temperature intervals) must be reset after changing the MTF (refer to page 16).

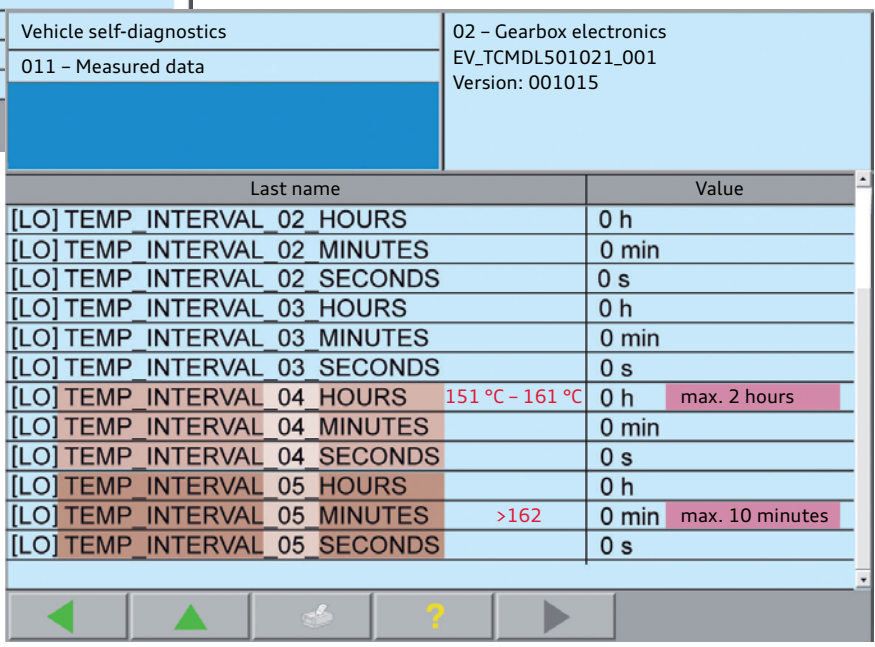

617_026

If the event memory entry "Gear oil deterioration" is generated, the cooling function becomes active when an MTF temperature of 151 °C is exceeded (instead of > 163 °C), refer to page 21.

Cooling function

If the MTF temperature reaches critical levels, it must be reduced or prevented from increasing any further. The gearbox control unit initiates countermeasures, which are referred to herein as the "cooling function".

When the cooling function is active, the vehicle's maximum speed is decreased in order to reduce heat input into the MTF.

This is how the cooling function works:

If an MTF temperature of 163 °C is exceeded, the maximum travel speed (V max.) is initially reduced by 20 kph. This corrective adjustment is made by reducing the engine power output when the speed limit threshold is reached. The vehicle's speed is gradually reduced in increments of 1 kph per second (20 kph in 20 seconds).

The following example shows how the cooling function works:

A vehicle is travelling at 260 kph and the MTF temperature exceeds 163 °C. V max. is now limited to 240 kph as described above.

The MTF temperature is monitored at two-minute intervals and should decrease by at least 2 °C within these two minutes. If this is not the case, V max. is reduced by a further 20 kph. In this example, V max. is 220 kph.

If the MTF temperature decreases by more than 2 °C within two minutes, the actual speed limit threshold is initially maintained. The temperature is monitored at two-minute intervals. At the end of the two-minute cycle, the system decides whether to further reduce or maintain the vehicle's current speed.

When the MTF temperature drops below approx. 147 °C, the limit on maximum speed is canceled again.

V max. is only limited down to a speed of 210 kph (lowest speed reduction threshold).

If the cooling function is active, the event memory entry "P06AA – Internal temperature sensor 2, temperature too high" is generated. No fault message is displayed in the instrument cluster.

Drivers will normally notice the restrictions on maximum speed and contact their service partner. Possible complaint: no power at times, vehicle is not achieving V max. or similar descriptions.

If the event memory contains the above-mentioned entry, it is the task of the service partner to check the following points and explain the cooling function to the driver.

A distinction is made between two cases:

Case 1:

Temperature interval 04 or 05 has been utilised by less than 50 % (refer to page 20).
In this case, all that need be done is clear the event memory and explain the cooling function to the driver.

Case 2:

Temperature interval 04 or 05 has been utilised by more than 50 %.
In addition to informing the driver and clearing the event memory, it is recommended that the MTF be changed. The next point to clarify is whether it make sense to change the MTF immediately? If the 30,000 km MTF change interval or another service event is due anyway, the MTF can also be changed at this time.

Safety function

If the MTF temperature continues to increase despite the fact that the cooling function is active and exceeds 180 °C for more than 30 seconds, the event memory entry "P0218 Maximal gear oil temperature exceeded" is generated. The yellow gearbox icon and the fault message "Gearbox malfunction: you can continue driving (limited functionality)" appear in the instrument cluster.

In this case, a thermal overload has occurred rendering the MTF unusable. It must also be assumed that the electrical gearbox components and plastic parts have been damaged. In the case, the gearbox must be replaced.

617_030

Gearbox malfunction:
you can continue driving (limited functionality)

Selector mechanism

The operating logic of the selector for the sport program (speed S) has been reconfigured. To shift from D to S (or from S to D), the selector is flicked back out of D once only. The selector always springs back to the D/S position. The shift schematic has has been adapted to the new operating logic.

Advantages for the customer:

- In the case of models equipped with Audi drive select, the S program can now be selected irrespective of the mode selected in Audi drive select.
- tiptronic mode can now also be selected in the S program

The shift schematic with gearshift indicator is integrated in the console trim frame. The display unit Y26 is installed from below as a separate component.

617_037

Reference
For more information about the selector mechanism, please refer to Self Study Programme 409 "Audi A4 ’08", page 34 ff.

Torque vectoring

Introduction

Torque vectoring provides improved traction when cornering and thereby enhances driving dynamics noticeably. Torque vectoring is a software function in the ESC control unit.

It is an evolution of the electronic differential lock for front-wheel-drive models.
In the case of the quattro powetrain, torque vectoring allows torque-controlling braking intervention at all four wheels.

Background

The principles of driving dynamics dictate that the maximum drive torque $\mathbf{M_A}$ transmissible to the wheels on the outside of the curve increases with increasing transverse acceleration $\mathbf{a_y}$, while the maximum drive torque transmissible to the wheels on the inside of the curve decreases by the same amount. The adjacent diagram illustrates this behaviour.

This is caused by the effect of centrifugal force, which acts at the vehicle's centre of gravity with its line of action running towards the outside of the bend. This produces what is known as roll torque, which is stabilised by the wheels. This roll torque reduces the load on the inside wheels and increases the load on the outside wheels. It follows that the wheels on the inside of the curve cannot transmit as much torque as the wheels on the outside of the curve.

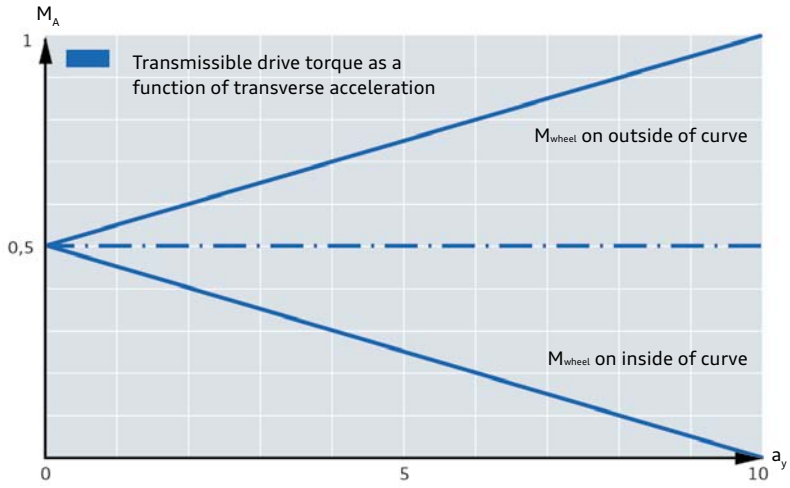

617_029

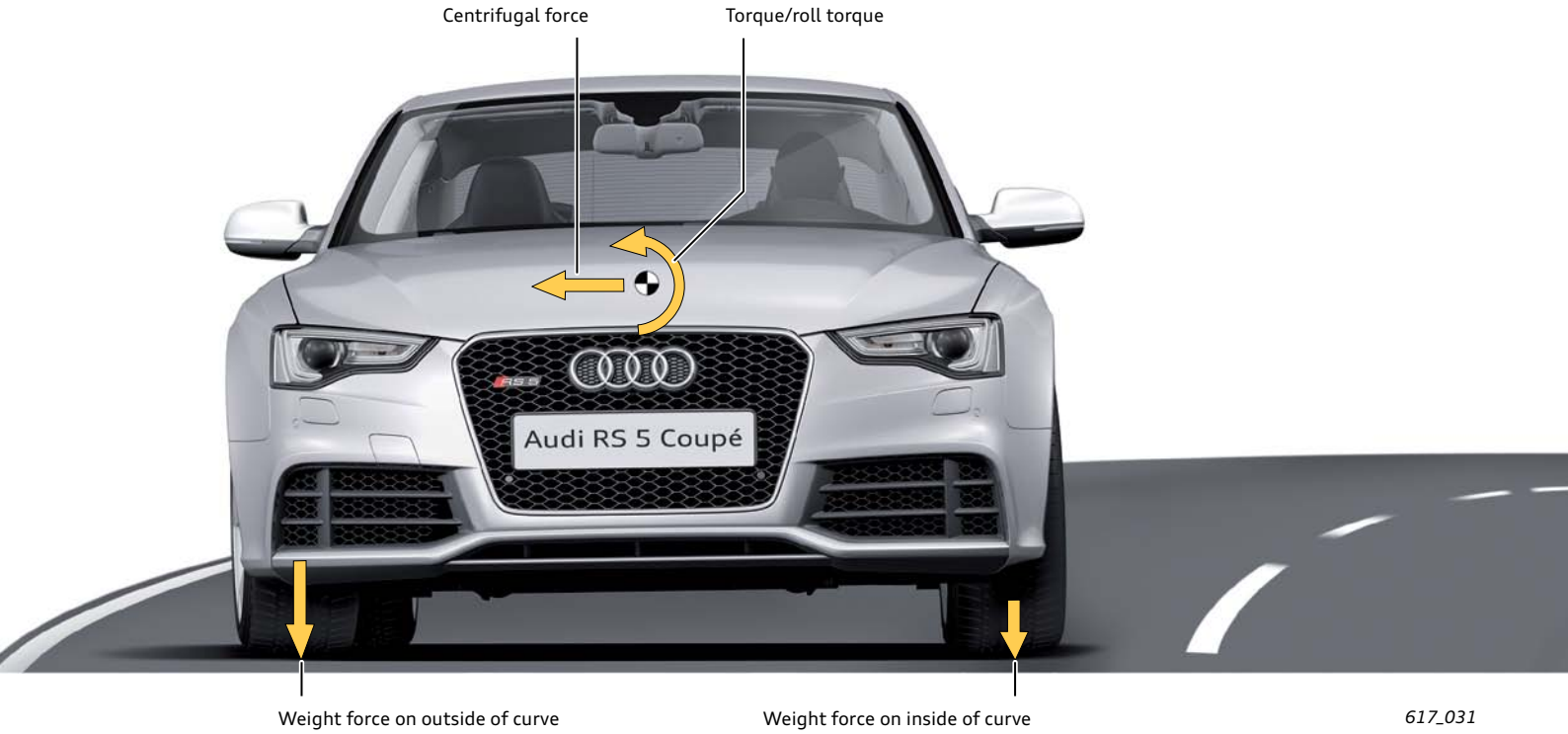

617_031

The open axle differentials always distribute drive torque to both wheels of an axle at a ratio of approximately 1 : 1 (refer to Figure 617_033). If the maximum drive torque transmissible to the wheel on the inside of the curve decreases while cornering, only the same amount of torque is transmissible to the wheel on the outside of the curve even if the higher effective load on this wheel would allow a much higher drive torque. The wheel on the inside of the curve dictates how much drive torque is transmissible. If loss of drive torque occurs at the wheel on the inside of the curve, the flow of drive torque through the driveline will be interrupted.

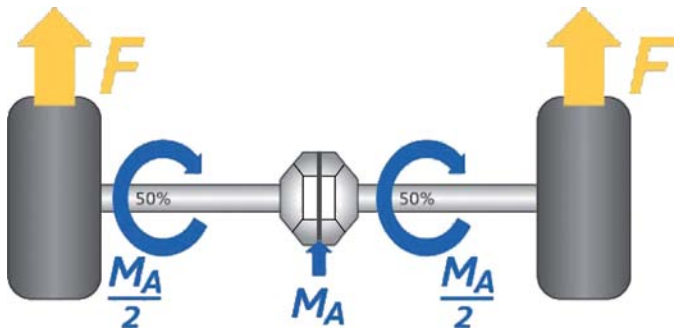

617_033

Working principle and function

Additional torque is developed by controlled braking of the wheels on the inside of the curve. In this way, additional drive torque is transferred to the wheels on the outside of the curve.

The system reacts to changes in wheel load, and not to wheel slip. It is active during cornering and intervenes **before** a state of critical slip occurs at the wheels. The system calculates the reduction in load on the wheels on the inside of the curve, and the increase in load on the wheels on the outside of the curve while cornering. This calculation is based mainly on the measured data generated by the steering angle and transverse acceleration senders.

From this, the ESC control unit determines the braking pressure required for the wheels on the inside of the curve. The required braking pressure is relatively low at approx. 5 bar – 15 bar, minimising brake load.

Torque vectoring provides a high level of driving dynamics while at the same time minimising system complexity and providing excellent ride comfort.

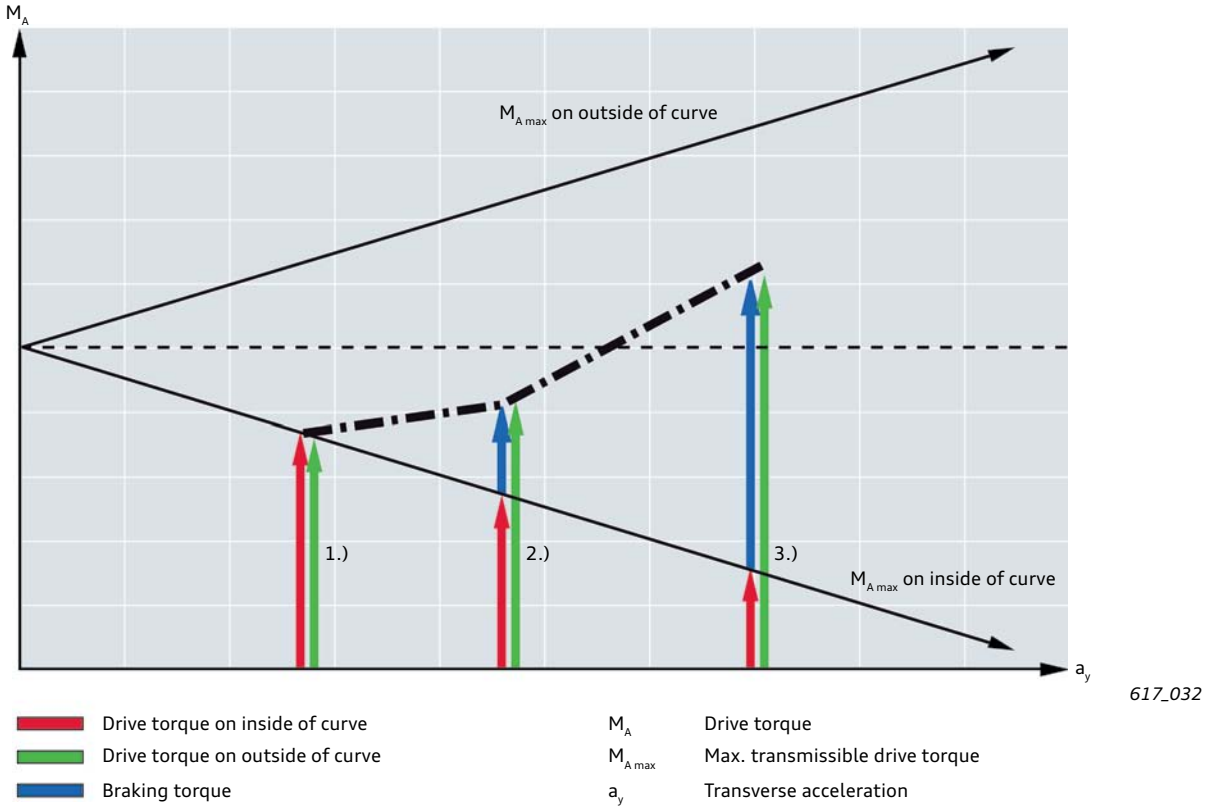

1.) Cornering without braking intervention

As the amount of transmissible drive torque is dependent on the wheels on the inside of the curve, the amount of torque transmissible to the wheels on the outside of the curve cannot exceed this value.

2.) and 3.) Cornering with braking intervention

Braking torque is developed at the wheels under reduced load on the inside of the curve by active braking intervention. This braking torque acts as an additional torque and thus increases the total torque transmitted to the wheels on the inside of the curve, because more drive torque is needed in order to overcome the braking torque.
It follows that higher drive torque can also be applied to the wheels on the outside of the curve. This torque is equal in magnitude to the total torque transmitted to the wheels on the inside of the curve.

Straight-line driving

Wheel load and drive torque are evenly distributed on both sides.

617_007

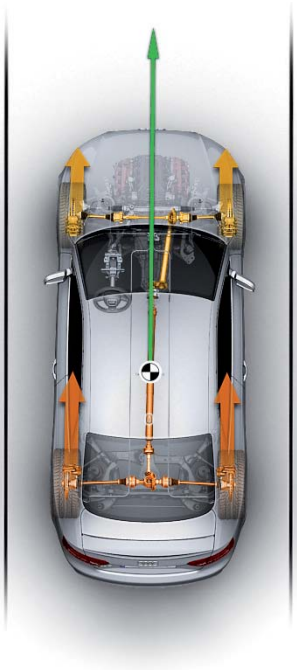

617_034

Cornering under load

The wheel load shifts towards the outside of the curve due to the action of centrifugal force.

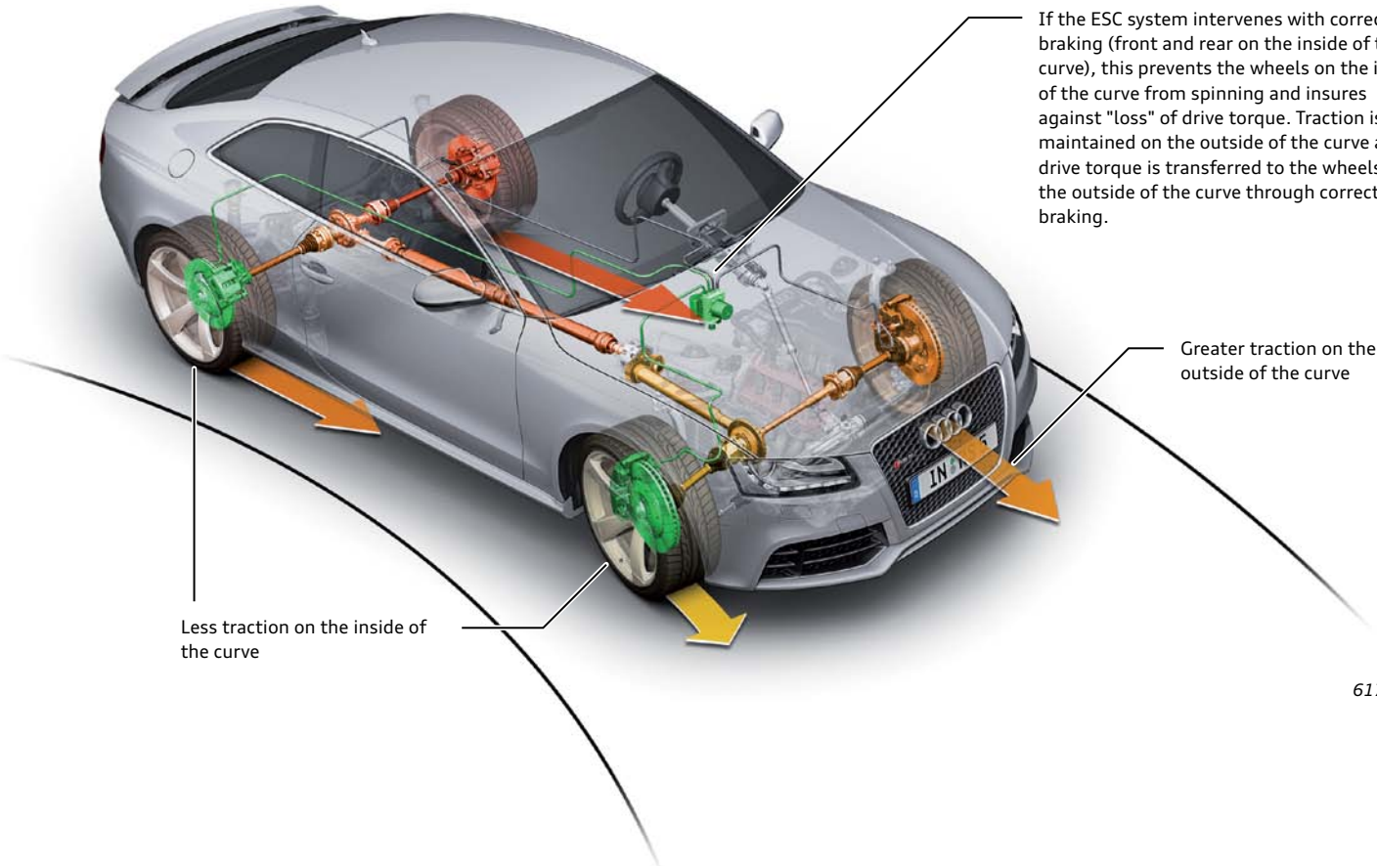

617_004

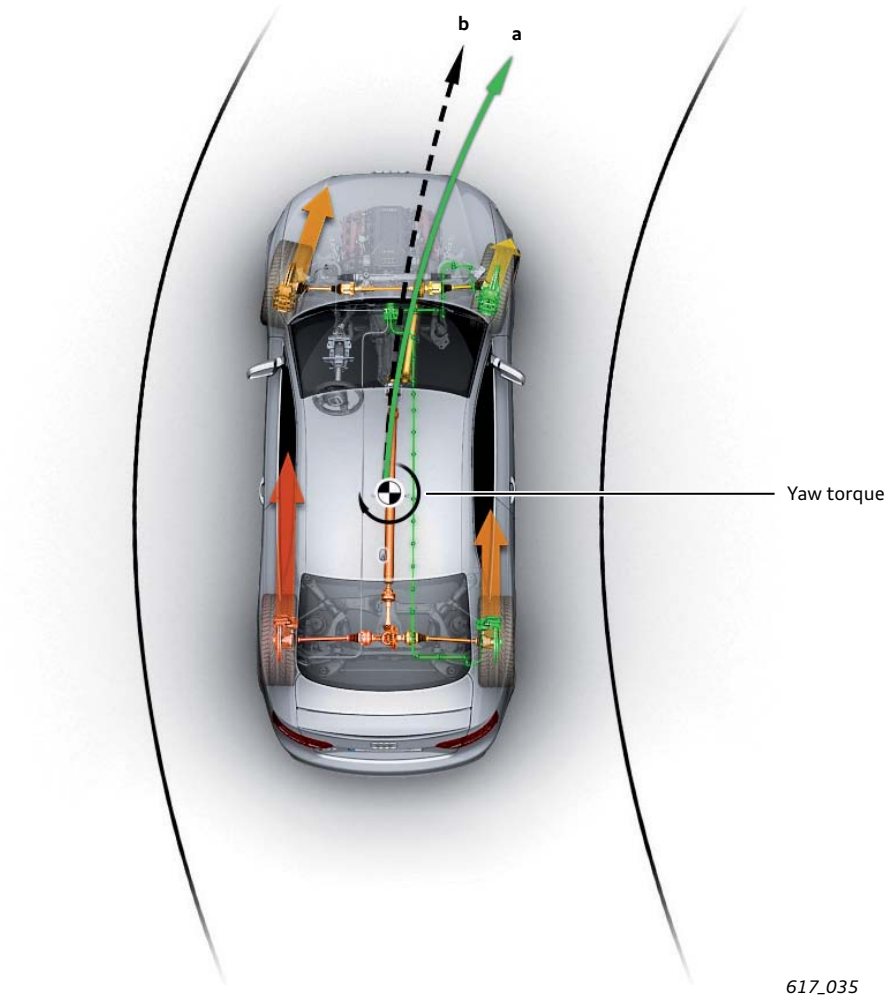

The higher drive torque on the outside wheels results in additional torque about the vehicle's vertical axis (yaw torque). This yaw torque has the effect of steering the vehicle into the curve. The vehicle thus achieves higher cornering speeds and is provided with precise, agile and more pinpoint handling (driving dynamics). The result is a noticeable improvement in driving dynamics.

a) If the system intervenes with corrective action, the vehicle travels the curve radius with less steering lock than would be the case without corrective intervention.

b) If no corrective action is taken by the system, the vehicle travels the curve radius under the same conditions and at the same steering angle as in a). This means that more steering lock would have to be applied to negotiate the corner at the same speed. A condition is that this is physically possible within the given constraints.

Information
Torque vectoring is always engaged if required and cannot be deactivated by the driver.

Torque vectoring is not activated on road surfaces with very low coefficients of friction.

In the case of vehicles with rear axle final drive unit 0BC (the standard final drive) torque vectoring is engaged on the front and rear axles. In the case of vehicles with rear axle final drive unit 0BF (sports differential), torque vectoring is engaged on the front axle only.

Annex

Test your knowledge

1. How is the desired asymmetric torque split achieved in the crown-gear differential?

☐ a) Through the axial offset of the crown gears utilising the leverage relative to the differential gears.
☐ b) Through the different reference diameters and resulting different leverages.
☐ c) Through the four fitted differential gears and their different leverages relative to the crown gears.

2. What is the position of the inner plates of the multi-plate clutch in the crown-gear differential, and how are they connected to the gearbox?

☐ a) They are positioned on the crown gear and positively connected to the latter.
☐ b) They are positioned on the differential case and positively connected to the latter.
☐ c) They are positioned on the differential gears and positively connected to the latter.

3. What are the points to note when towing vehicles with an 0B5 gearbox?

☐ a) Put the vehicle into gear so that the engine turns, driving the oil pump and lubricating certain parts of the gearbox.
☐ b) The vehicle may only be towed if the front or rear axle is elevated.
☐ c) Move the selector lever into the N position. Max. towing speed is 50 kph and max. towing distance is 50 km.

4. What is the task of the spring sleeve when fitting the splined prop shaft?

☐ a) The spring sleeve secures the spline in a radial direction.
☐ b) The spring sleeve secures the spline in an axial direction.
☐ c) The spring sleeve guides the prop shaft and otherwise has no function.

5. What are the points to note when fitting the splined prop shaft in connection with the spring sleeve?

☐ a) There are no special points to note because the spring sleeve is held in place on the joint hub by its spring elements.
☐ b) The spring sleeve must be fixed in place on the shaft stump before fitting the prop shaft.
☐ c) The prop shaft must be carefully positioned and mounted.

6. Which of these statements is true of the torque vectoring system?

☐ a) The system reacts to changes in wheel load, and not to wheel slip.
☐ b) The system reacts to wheel slip, and not to changes in wheel load.
☐ a) Additional torque is developed by controlled braking of the wheels on the outside of the curve.
☐ d) The ESC control unit sets a braking pressure of 5 bar – 15 bar at the wheels on the inside of the curve.

7. What effect does torque vectoring have?

☐ a) It produces an additional torque about the vehicle's vertical axis. This torque has the effect of steering the vehicle into the curve.
☐ b) The vehicle achieves a higher cornering speed.
☐ c) The vehicle is provided with agile, pinpoint and precise handling.

8. Why is MTF temperature monitoring necessary?

☐ a) To determine the heat input into the MTF.
☐ b) To be able to activate a cooling function if defined temperature limits are exceeded.
☐ c) To identify mechanical ageing of the MTF.

9. Which of the following assemblies is integrated in the MTF oil system of the 0B5 gearbox?

☐ a) Mechatronics
☐ b) Gear set
☐ c) Clutches

10. A customer brings in a vehicle because the "Gearbox malfunction: you can continue driving (limited functionality)" warning lamp in the instrument cluster is lit. The diagnostic tester shows the entry "P0218 Maximum gear oil temperature exceeded". What are the steps to take?

☐ a) The MTF temperature was between 131 and 150 °C. The MTF must be changed and the event memory cleared.
☐ b) The cooling function must be explained to the customer and the event memory cleared.
☐ c) Thermal overloading renders the MTF unusable, as well as damaging the electrical and plastic gearbox components. The complete gearbox must be replaced.

11. What effects does the activated cooling function have?

☐ a) Maximum vehicle speed is reduced.
☐ b) Heat input into the MTF is reduced.
☐ c) Engine power output is maintained.

12. How is an asymmetric-dynamic torque split produced in the crown-gear differential?

☐ a) The asymmetric basic torque split and the dynamic torque split cancel each other out.
☐ b) The asymmetric-dynamic torque split is a result of friction between the differential gears and the crown gears.
☐ c) In addition to the asymmetric basic torque split, a lock-up effect proportional to the drive torque is created by the multi-plate clutch.

13. By which operating states is an asymmetric limited slip centre differential defined?

☐ a) Maximum distribution to the front axle under throttle.
☐ b) Minimum distribution to the front axle during overrun.
☐ c) Minimum distribution to the rear axle under throttle.
☐ d) Maximum distribution to the rear axle during overrun.

Test solutions:
1 b; 2 a; 3 c: 4 b; 5 c; 6 a,d; 7 a,b,c; 8 a,b; 9 b; 10 c; 11 a,b; 12 c; 13 a,d

All rights reserved.
Technical specifications
are subject to change.

Copyright
AUDI AG
I/VK-35
service.training@audi.de

AUDI AG
D-85045 Ingolstadt
Technical status 10/12

Printed in Germany
A14.5S01.03.20