Self Study Programme 994633AG





Audi Q7 (type 4M)
Chassis

Audi
Service Training

The material in this Self Study Program (SSP) may contain technical information or reference vehicle systems and configurations which are not available in the Canadian market.

Please ensure you reference ElsaPro for the most current technical information and repair procedures.

Suspension system - overall concept

The new Audi Q7 is a comfortable companion. It tracks smoothly and confidently on the motorway and spoils its passengers with a high level of rolling comfort. On twisting country roads, it is manageable, precise and agile, and it also keeps going when the asphalt stops. Compared with the previous model, the center of mass of the big SUV has been lowered by 50 mm, in part by installing the engine lower.
The chassis also features numerous changes. Both the front and rear axles are five-link designs, replacing the double wishbone axles of the previous model. The new elastomer bearings and the separate springs and dampers at the rear axle respond very sensitively. The new electromechanical power steering with servotronic function is very efficient. It provides for direct steering response, and several of the new driver assistance systems would not be possible without it.
Compared with the previous model, the chassis of the new Audi Q7 is over 100 kg lighter. The links of the wheel suspensions, for example, are now made of aluminium and high-strength steel. The front axle prop shafts are hollow, and the pivot bearings are aluminium forgings.
Audi offers another groundbreaking innovation as an option: all-wheel steering.
The new Audi Q7 already offers excellent comfort even with the standard steel suspension. Rolling is even smoother with the adaptive air suspension, which is managed by a newly developed central vehicle control unit that drives all body control systems. The new controllers developed by Audi for the air suspension and active damping vary the body height and body comfort as a function of the situation.
The new Audi Q7 comes as standard with 18-inch wheels and 255/60 tires. Audi and quattro GmbH offer a large number of additional wheels in sizes up to 21 inches as options. Large, vented brake discs bring the SUV safely to a stop. They are gripped up front by aluminium six-piston calipers. The electromechanical parking brake, updated with convenient hill hold and startup functions, acts on the rear wheels.
An electronic hill descent assist complements the wealth of equipment. New ESC and ACC generations provide the basis for a number of driver assistance systems.



633_001

quattro all-wheel drive as standard with all Audi Q7 chassis. The following chassis versions are offered:

Standard chassis
(production control number 1BA)
The standard suspension as basic equipment features steel springs and unregulated damping.

Chassis with air suspension and electronic damper control (adaptive air suspension, 1BK)
This chassis version is optional.

Sport chassis with air suspension and electronic damper control (adaptive air suspension, 2MA)
The sport chassis with air suspension is optional too.

Contents

Axles and chassis alignment

Front axle 4
Rear axle 6
Chassis alignment / setup 8

Chassis with air suspension and electronic damper control (adaptive air suspension)

Overview 9
Design and function 10
System function 14
Operation and driver information 19
Service operations 20

Brake system

Overview 22
Wheel braking systems 22
Brake servo, master brake cylinder, pedal assembly 24
ESC 25

Steering system

Overview 27
System components and operation 28

All-wheel steering

Overview 29
Technical implementation 32
System components 33
Function of the overall system 35
Basic function 36
Additional functions/special operating states 36
Operation and driver information 37
Service operations 38

Adaptive Cruise Control (ACC)

System overview 39
Design and basic function of system components 40
Design and function of system components 42
Service operations 50

Wheels and tyres

Overview 51
Low tyre pressure indicator 52
Tyre pressure monitoring system 52

The Self Study Programme teaches a basic understanding of the design and mode of operation of new models, new automotive components or new technologies.
It is not a Repair Manual! Figures are given for explanatory purposes only and refer to the data valid at the time of preparation of the SSP.
This content is not updated.
For further information on maintenance and repair work, always refer to the current technical literature.

Note

Reference

Axles and chassis alignment

Front axle

The front axle is based on the modular longitudinal platform (MLB). The Audi Q7 adopts the tried and tested five-link axle concept already used on other Audi models.

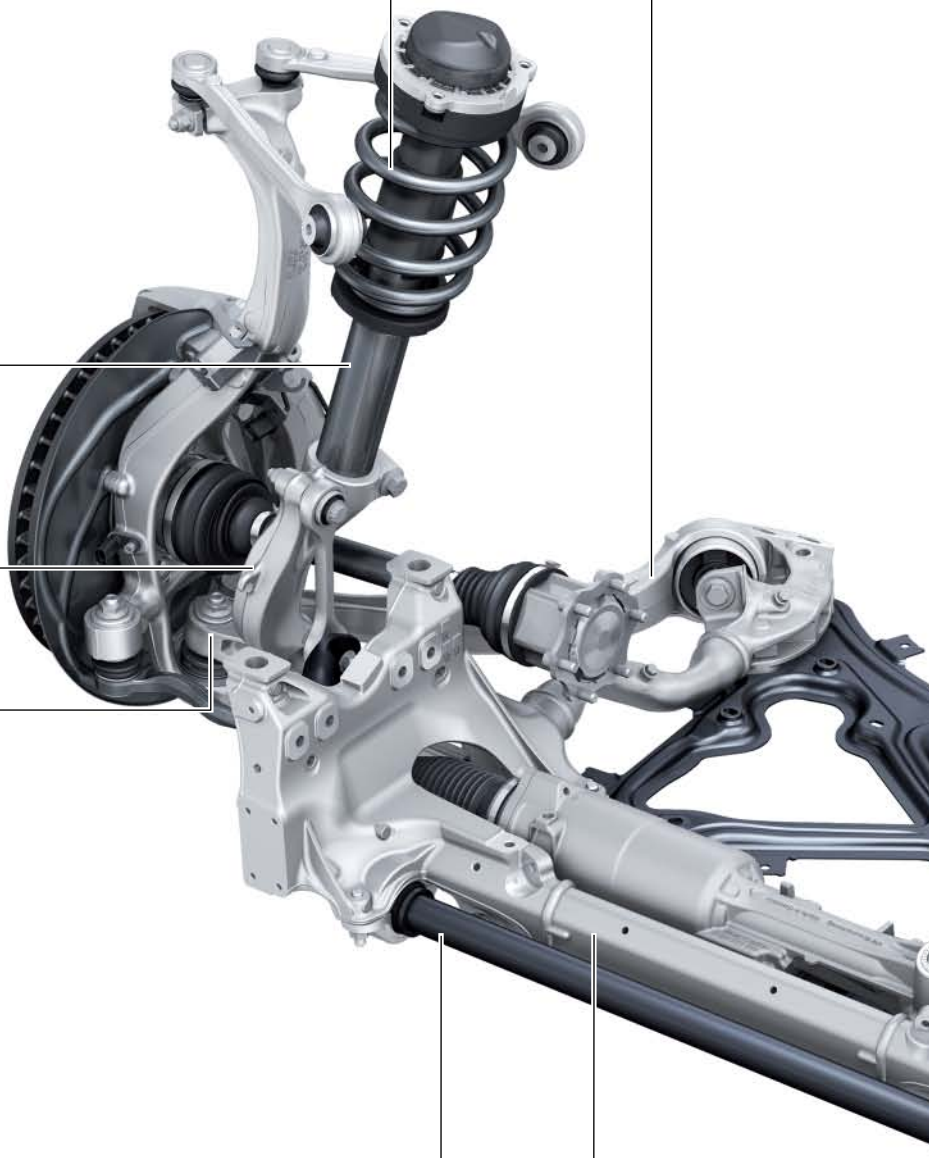

Spring
– Steel spring with linear characteristic

Guide link
– Forged aluminium design

Damper
– Twin-tube shock absorber with additional polyurethane spring
– Tailored to Q7
– Low-friction axial bearings for upper strut mountings (new development)

Suspension strut knuckle
– Cast aluminium design
– Bolted to support link

Joint
– The control arm/pivot bearing are connected by a spherical joint
– Aluminium housing

Engine/gearbox mount
– Welded aluminium design with cast nodes and IHU profiles

Anti-roll bar
– Tubular anti-roll bars
– Vulcanised bearing elements

Cross strut
– Steel construction
– bolted to subframe to increase stiffness

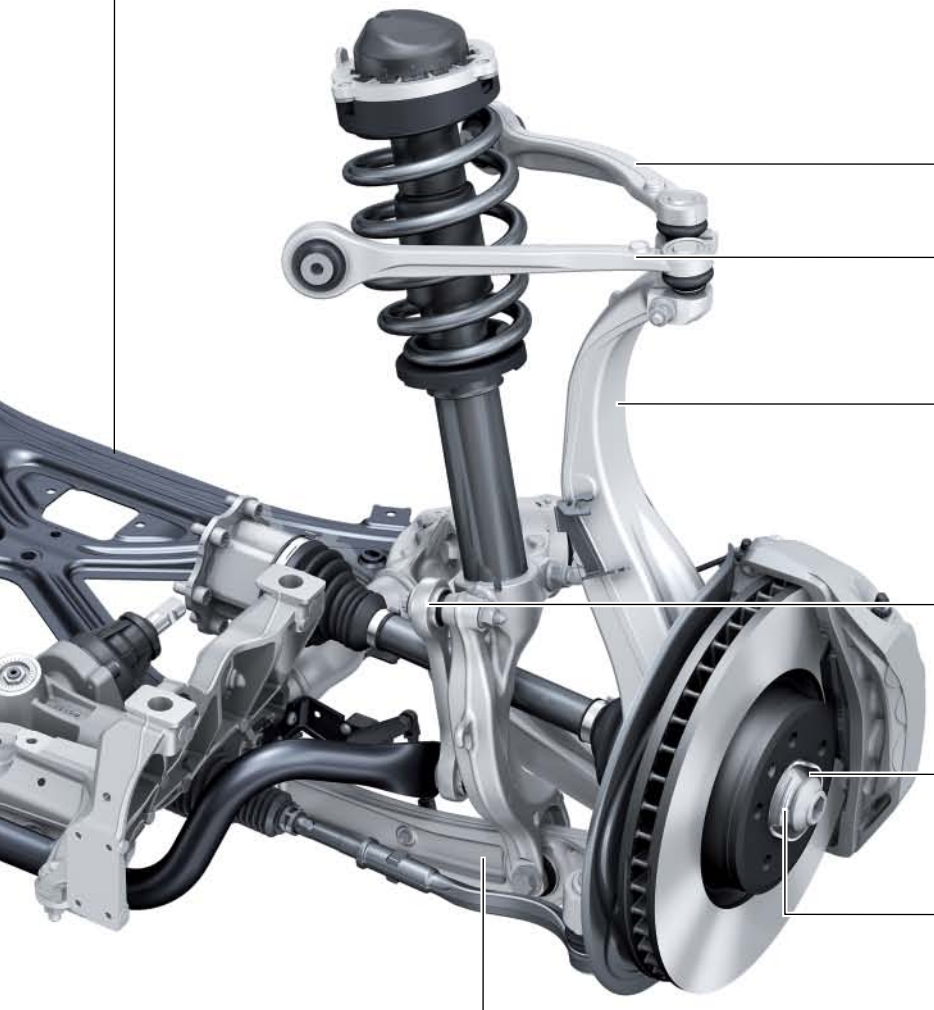

Upper link
– Forged aluminium design
– Mounted directly to body without a separate bearing pedestal

Pivot bearing
– Forged aluminium design
– 2 axle load dependent versions (wheel bearing width)

Tie rod
– Aluminium housing with rubber-metal bearings

Wheel bearing
– 2nd generation wheel bearing
– 2 versions with different wheel bearing widths (40.5 mm and 42 mm)

Wheel hub
– Steel construction

633_002

Support link
– Forged aluminium design

Rear axle

The rear axle is also based on the modular longitudinal platform (MLB). The Audi Q7 features a newly developed five-link axle. By paying close attention to lightweight design, the weight of the axle has been reduced by 40 kg compared with the previous model.

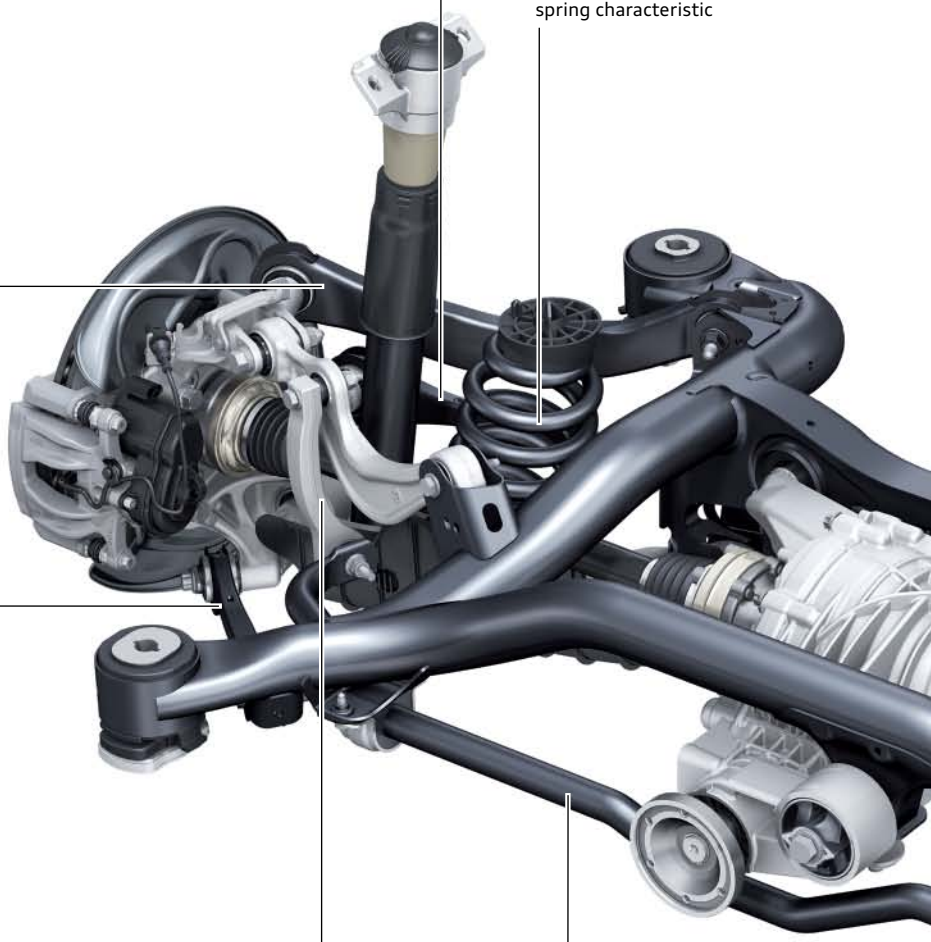

Track link
– Steel construction

Spring
– Steel springs with linear spring characteristic

Upper rear wishbone
2 versions:
– Steel design (standard)
– Forged aluminium design for adaptive air suspension, rear axle steering and cars with "large" steel springs (high axle load)

Lower front wishbone
– Steel construction

Tie rod
– Aluminium extrusion profile with rubber-metal bearings

Anti-roll bar
– Tubular anti-roll bars
– Two-piece bearing cups, loose and bolted using steel clamps

Engine/gearbox mount
- Steel construction
- Flexible body attachment, achieved using rubber-metal bearings at rear and hydraulic bearings at front
- 3 versions based on axle load: load group 3, loud groap 4 and load group 4 with rear axle steering

Damper
- Twin-tube shock absorber with additional polyurethane spring

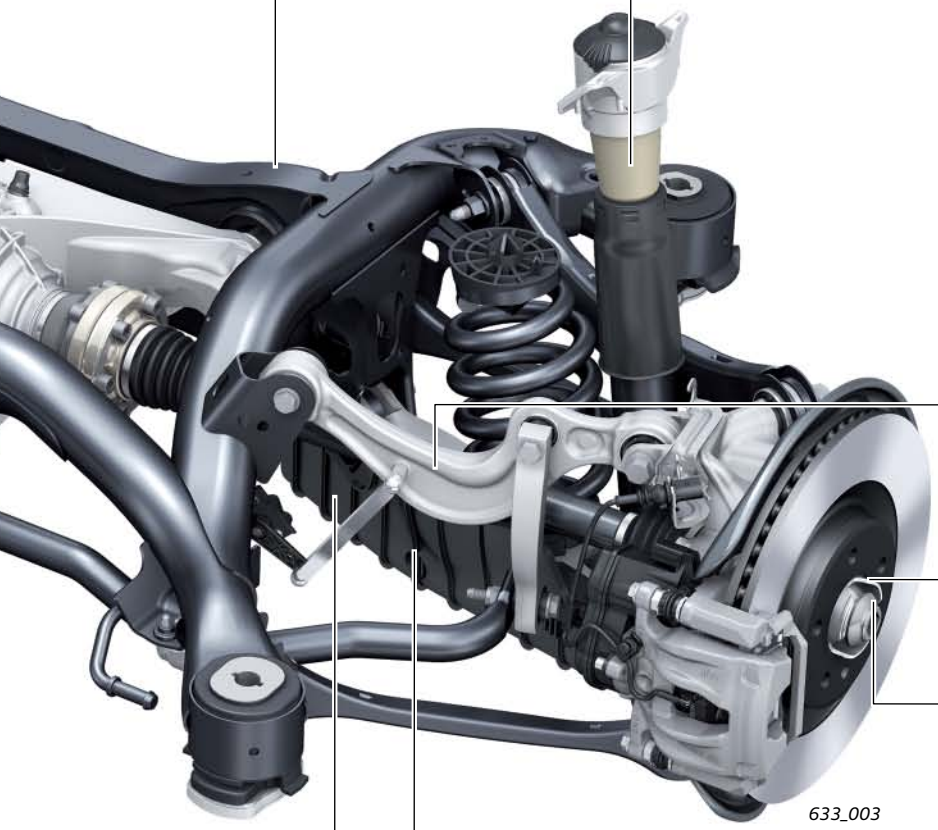

633_003

Upper wishbone
- Forged aluminium design
- Attachment of the anti-roll bar coupling rod and the linkage of the level control system sensor

Wheel carrier
- Aluminium casting
- 2 versions based on different wheel bearings

Wheel bearing
- 2nd generation wheel bearing
- 2 axle load based versions (various outer diameters)

Spring link
- Shaped aluminium extrusion profile
- Attachment of spring and damper
- Concealed by aero trim in diagram

Aero trim
- Attached by clips to the spring link at the bottom
- Reduces lift

Balancer weight
- Bolted to subframe
- Not visible in diagram

Chassis alignment / setup

The left and right tracking values on the front axle can be adjusted separately by altering the length of the track rods. The camber can be centred within narrow limits by shifting the subframe transversely.
Individual tracking values and individual camber values can be adjusted on the five-link rear suspension.

Tracking adjustment at attachment point of track link and subframe (not shown in graphic)

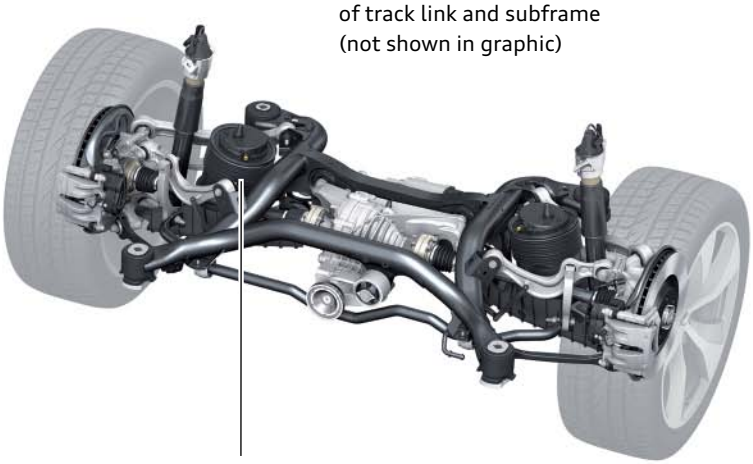

Camber adjustment at attachment point of spring link and subframe (concealed by aero trim)

Tracking adjustment

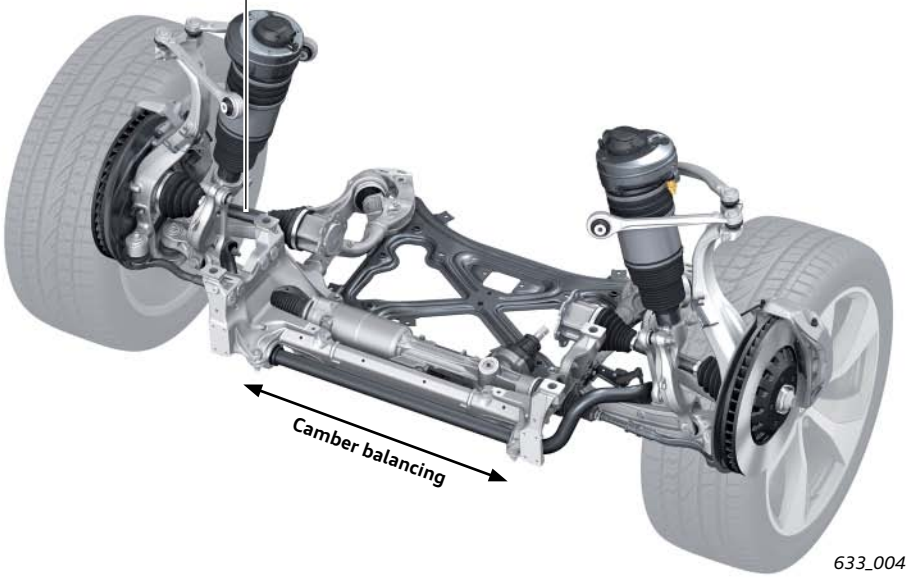

633_004

Note
Always adjust the rear axle camber first, then the tracking. This is important because the tracking values are altered slightly when the camber is adjusted.

Chassis with air suspension and electronic damper control (adaptive air suspension)

Overview

Two aas chassis versions with a different configuration/setup are optionally available for the Audi Q7. They have production control numbers (PR number) 1BK "adaptive air suspension" and 2MA "adaptive air suspension sport".
The system is based on the aas systems already used on other Audi models. A key new feature is the chassis control unit J775. This control unit contains the control software for the air suspension and damping systems,

and will, in the future, also contain control algorithms for other chassis control systems. A high integration platform such as this makes it possible integrate the large number of chassis versions into an extended control unit architecture and, thus, to reduce the number of hardware variants in the vehicle. It is also possible to use a common hardware including the necessary safety concept for the miscellaneous chassis versions.

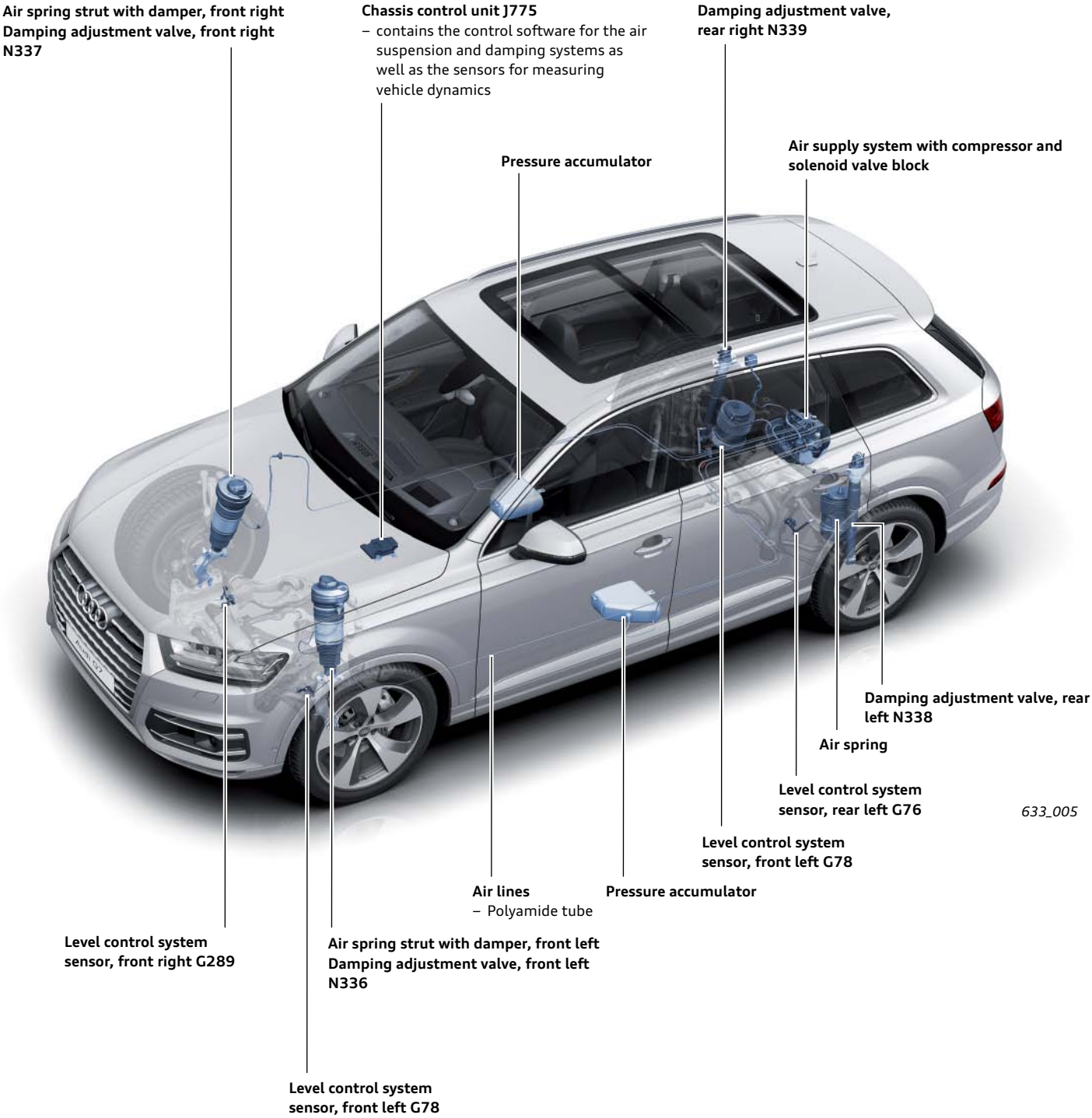

Design and function

Chassis control unit J775

In the Audi Q7 and future models based on the modular longitudinal platform, the chassis control unit will function as a universal control unit for chassis control systems.

The control unit in the Audi Q7 contains the suspension and damping control software developed by Audi. In addition, the sensors are integrated in the control unit to measure vertical acceleration (z), as well as the yaw rates about the longitudinal axis (x direction, squat and roll) and the transverse axis (y direction, pitch).

The control unit is installed at the front end, below the air conditioner under the centre console.

A FlexRay bus is used for communication.



633_006

Air supply unit

The compressor with electric motor as drive and the solenoid valve block are mounted on a common bracket as a compact unit. The entire unit is attached to the vehicle's outer body at the rear right.

The compressor / electric motor unit is additionally mounted to the bracket by spring elements. The bracket is vibration-isolated from the body at the mounting points by rubber mounts. The complete unit is protected against stone chip damage and other damage by a special cladding.

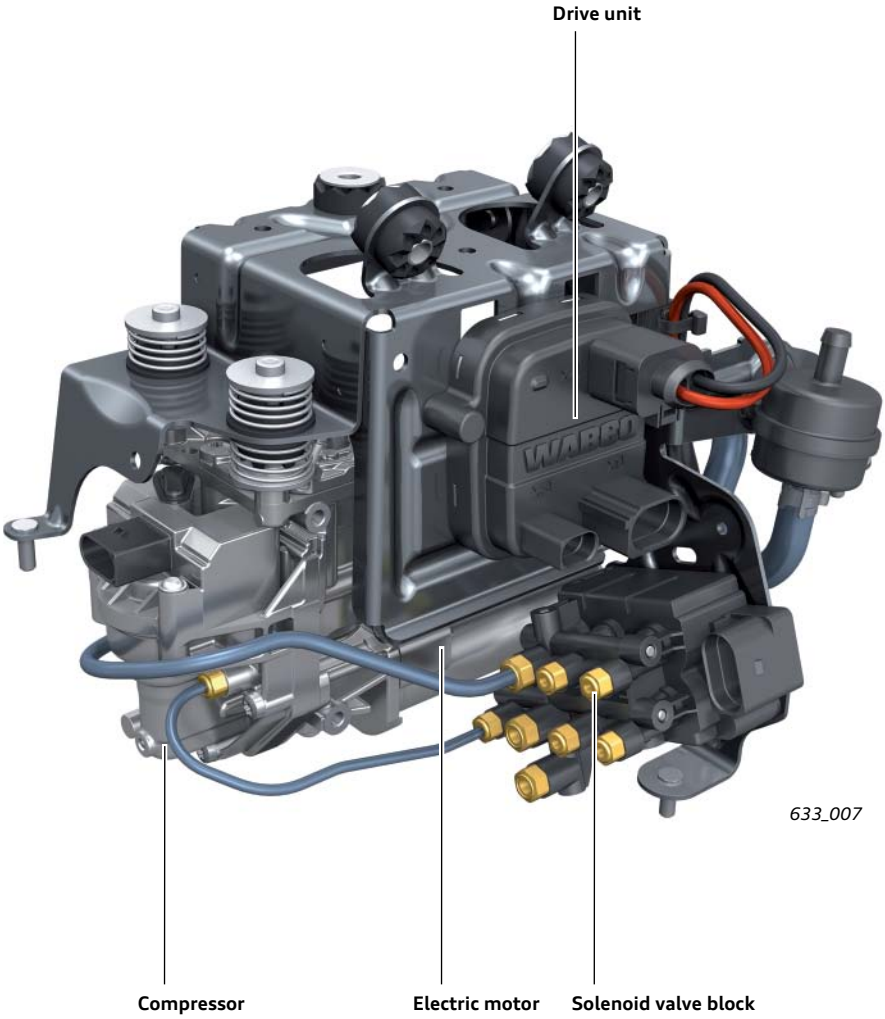

633_007

Compressor with electric motor

A newly developed two-stage "twin" compressor is used to produce the requisite air pressure. The compressor is driven by an electric motor. A few feature is the mode of activation of the electric motor. Instead of using a mechanical relay, the motor is now activated by a cyclic pulse wave modulated (PWM) signal.
This mode of activation allows for soft starting and stopping of the motor and reduces the peak load of the onboard power supply. The activation signal is processed by a special drive unit, which is also attached to the common bracket by clips.
A separate bus (CAN bus) is used for data transfer between the chassis control unit and the drive unit.

The compressor compresses the air by means of 2 pistons.
The piston of the 1st compression stage (smaller diameter) is connected directly to the eccentric plate of the drive shaft by its conrod. The piston of the 2nd compression stage (larger diameter) is mounted on the conrod of the 1st compression stage. As a result, both pistons move jointly in the same direction. While the 1st compression stage piston is compressing the air, the 2nd compression stage piston draws in air.
The 1st compression stage produces a pressure of about 4-6 bar, while the 2nd compression stage piston delivers a system pressure of about 18 bar.
The temperature and running time of the compressor are monitored on the basis of a temperature model. The maximum "on" time is about 4 min. The activation electronics also have a safety function which, in the worst case scenario, switches off the compressor after a maximum of 6 minutes.

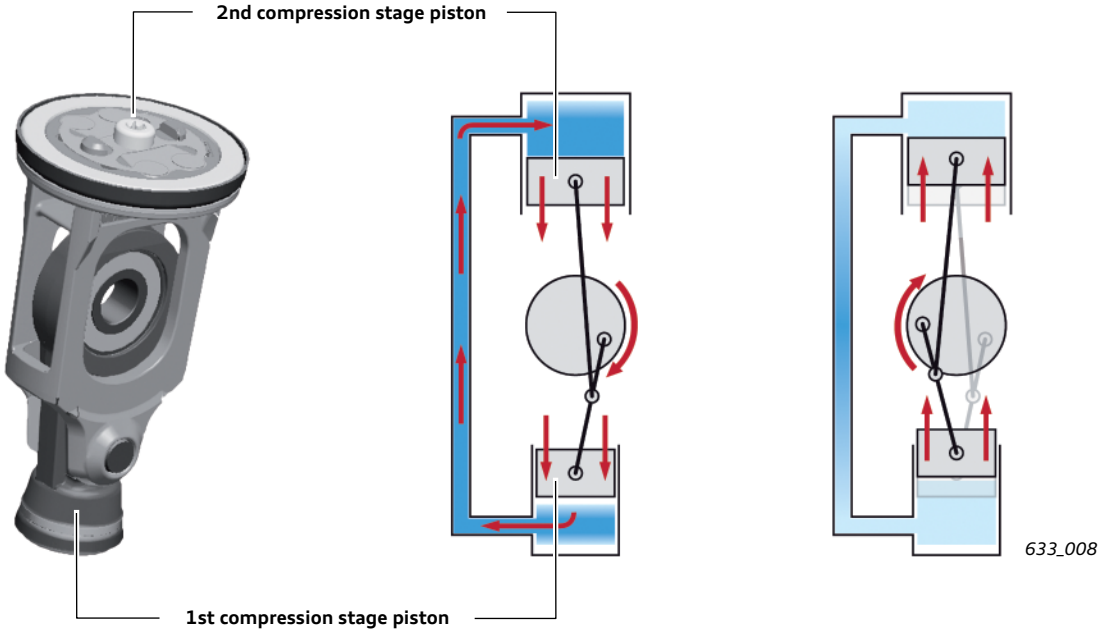

Solenoid valve block

The solenoid valve block consists of five solenoid valves which connect the air supply unit to the air suspension and the pressure accumulators, or interconnect the air suspension and the pressure accumulators.

A pressure sensor is integrated in the solenoid valve block.

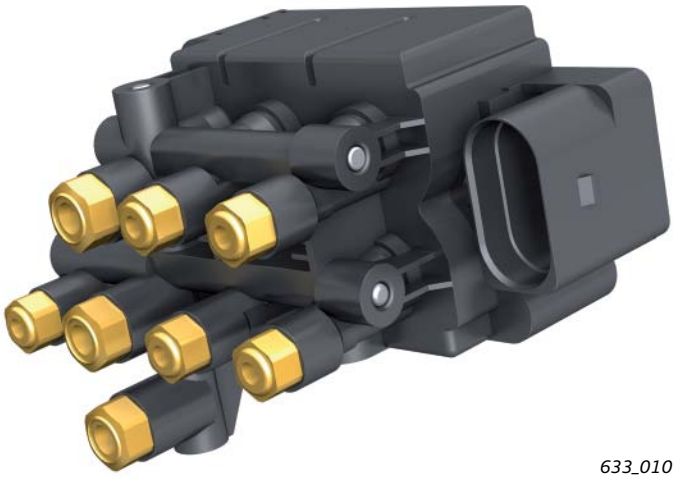

633_010

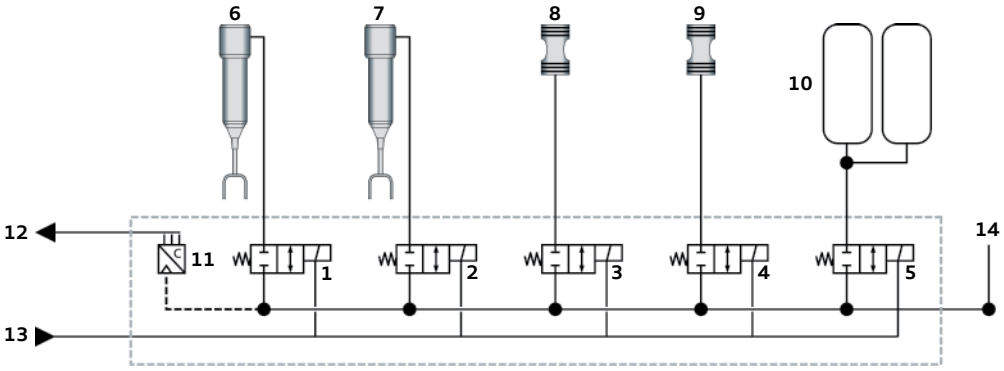

Solenoid valve block *633_011*

1-5 = solenoid valves
6,7 = air suspension, front axle
8,9 = air suspension, rear axle
10 = pressure accumulator
11 = pressure sensor
12 = pressure reading
13 = electrical activation of solenoid valves
14 = compressor connection

The 2/2 way valves (1-5) in the solenoid valve block open or close the pathway to the pressure accumulators and the air suspension. The graphic shows the valves in a neutral state, i.e. not electrically activated. The valves are closed when de-energised.

When required, the corresponding solenoid valve is activated in order to fill or exhaust the assigned air spring.

The pressure sensor is arranged in such a way that it measures the pressure in the pressure accumulators or the pressure in the air suspension system, depending on the configuration of the solenoid valves.

Pressure accumulator

For packaging reasons, the Audi Q7 has two separate pressure accumulators each with a capacity of 5 litres. The accumulator modules are installed in the rear footwell on the left and right hand sides of the vehicle and are interconnected by a line. They are made of aluminium.

The pressure accumulators are primarily used for making corrective adjustments in order to enhance vehicle acoustics while the vehicle is stationary or driving at low speeds. When the vehicle exceeds a speed of approx. 30 kph, the pressure accumulators are filled and control operations are preferably implemented by producing pressure using the compressor. In general, control operations can only be implemented using the pressure accumulator if the accumulator pressure is at least 3 bar higher than the pressure in the air spring to be controlled.



633_012

Front axle air spring strut

The air spring seal is made of natural rubber with polyamide strength members. Its is attached to the damper tube at the bottom and to the damper bearing at the top by clips. The resultant enclosed space forms the air chamber. The air spring seal "rolls" over the roll piston when the springs compress and rebound. The geometric shape of the roll piston determines the spring characteristic.

The minimal air pressure inside the chamber is limited to about 3 bar by a special valve (residual pressure retention valve) at the air connection. This protects the air spring seal against mechanical damage which can occur when the chamber is evacuated, particularly in the region of the rolling fold.

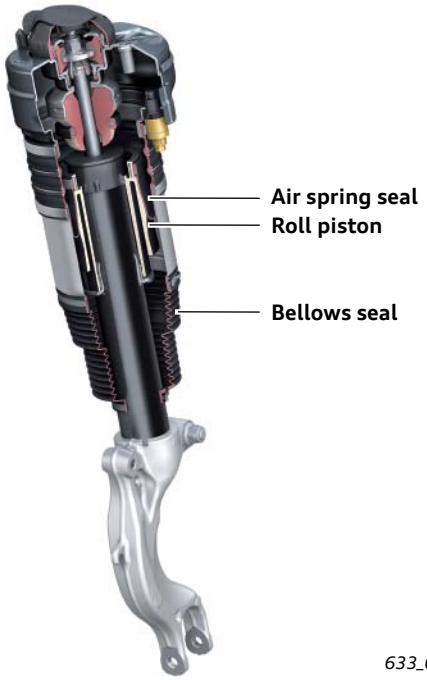

633_013

Rear axle air spring

The air spring seal is made of natural rubber with polyamide strength members. It is attached to the roll piston and the baseplate of the air spring by clips. The geometric shape of the baseplate and the upper part of the air spring define the installation position in the vehicle and provide protection against twisting.

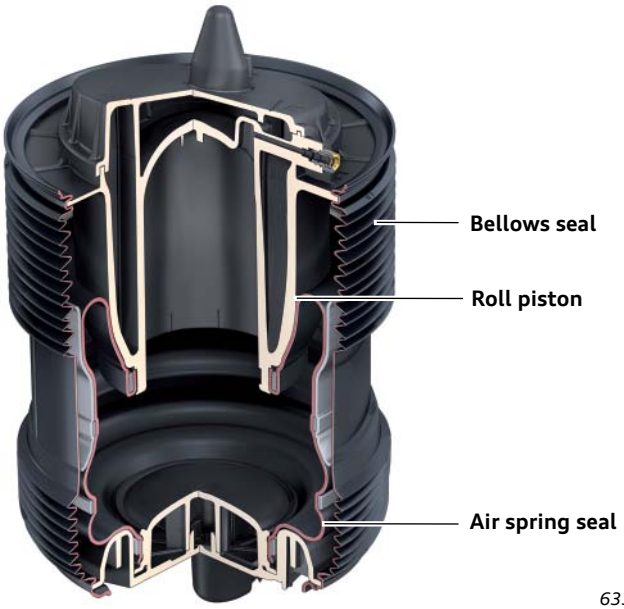

633_014

Air intake/ventilation

To meet the acoustic requirements, a damper is used for air intake and air discharge from the system. The damper is installed in the rear end, where it is protected inside the vehicle in front of the right-hand wheel arch.



633_015

System function

Filling the pressure accumulator

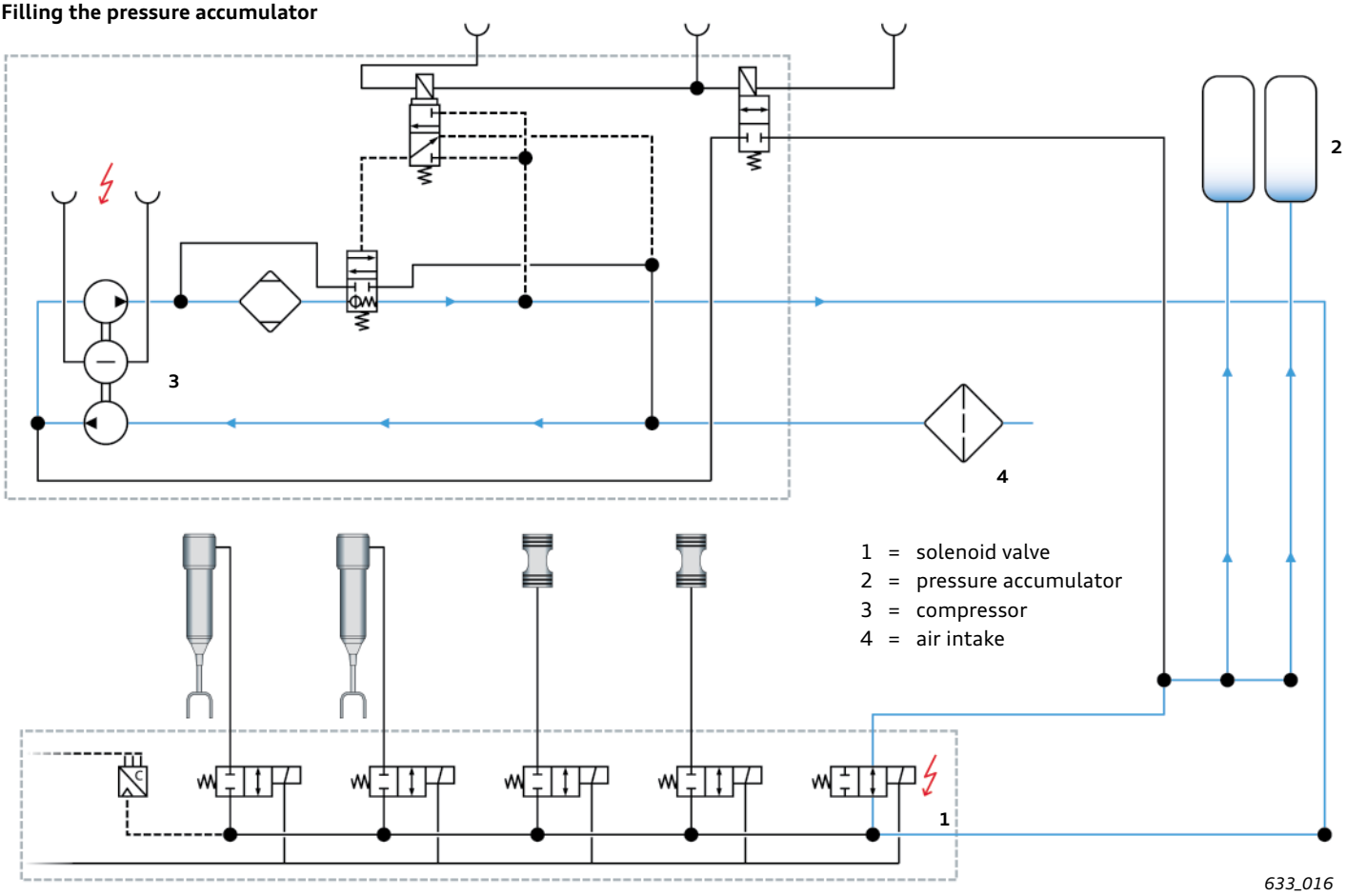

When the vehicle exceeds a speed of approx. 30 kph, the pressure accumulators are filled. The solenoid valve 1 is activated and a connection is established between the compressor and pressure accumulator.

Increasing ride height via pressure accumulator (using front axle as an example)

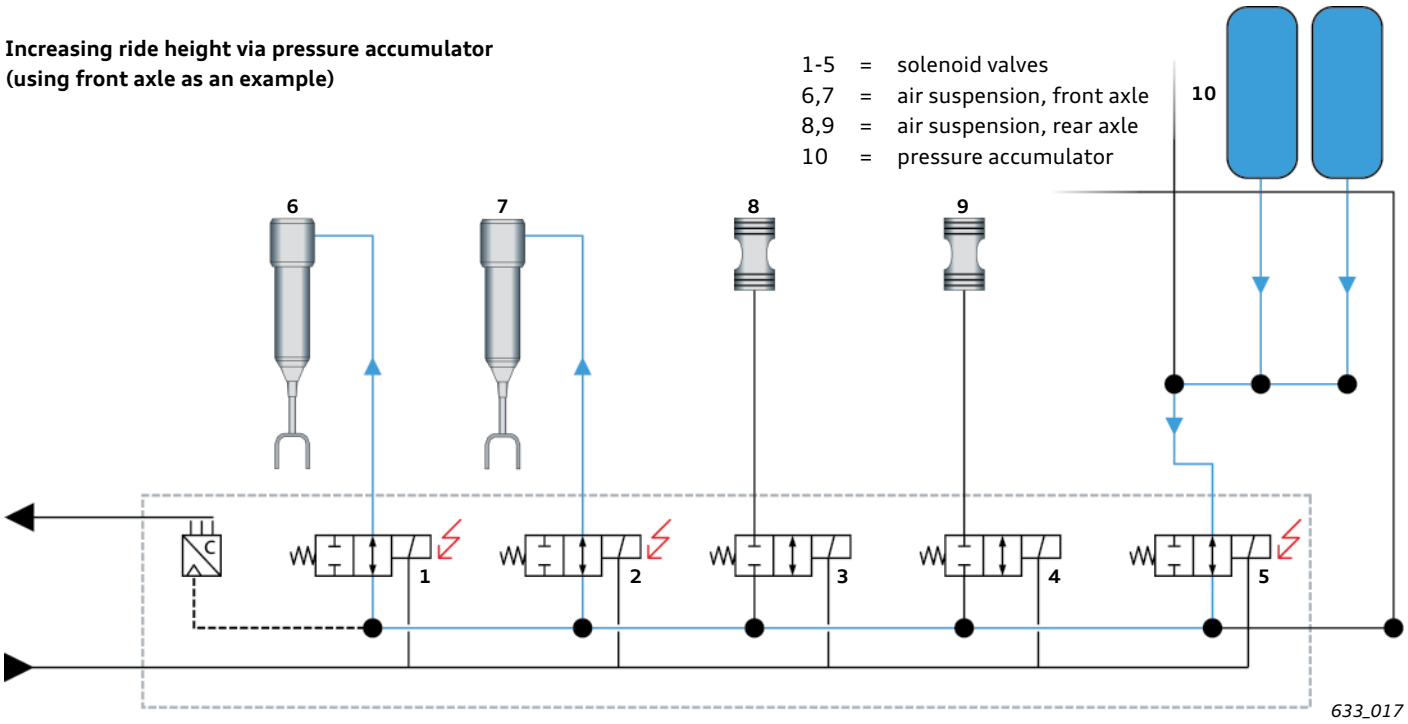

The pressure accumulators are primarily used for making corrective adjustments in order to enhance vehicle acoustics while the vehicle is stationary or when driving at low speeds. In general, control operations can only be implemented using the pressure accumulators if the accumulator pressure is at least 3 bar higher than the pressure in the air spring to be controlled.

The pneumatic diagram shows the valve configuration using an increase in ride height at the front axle as an example. Solenoid valves 1 and 2 in the solenoid valve block are activated and the compressor is not running (off).
The air flows from the pressure accumulators 10 into air springs 6 and 7 via open solenoid valves 1 and 2.

Increasing ride height via compressor (using front axle as an example)

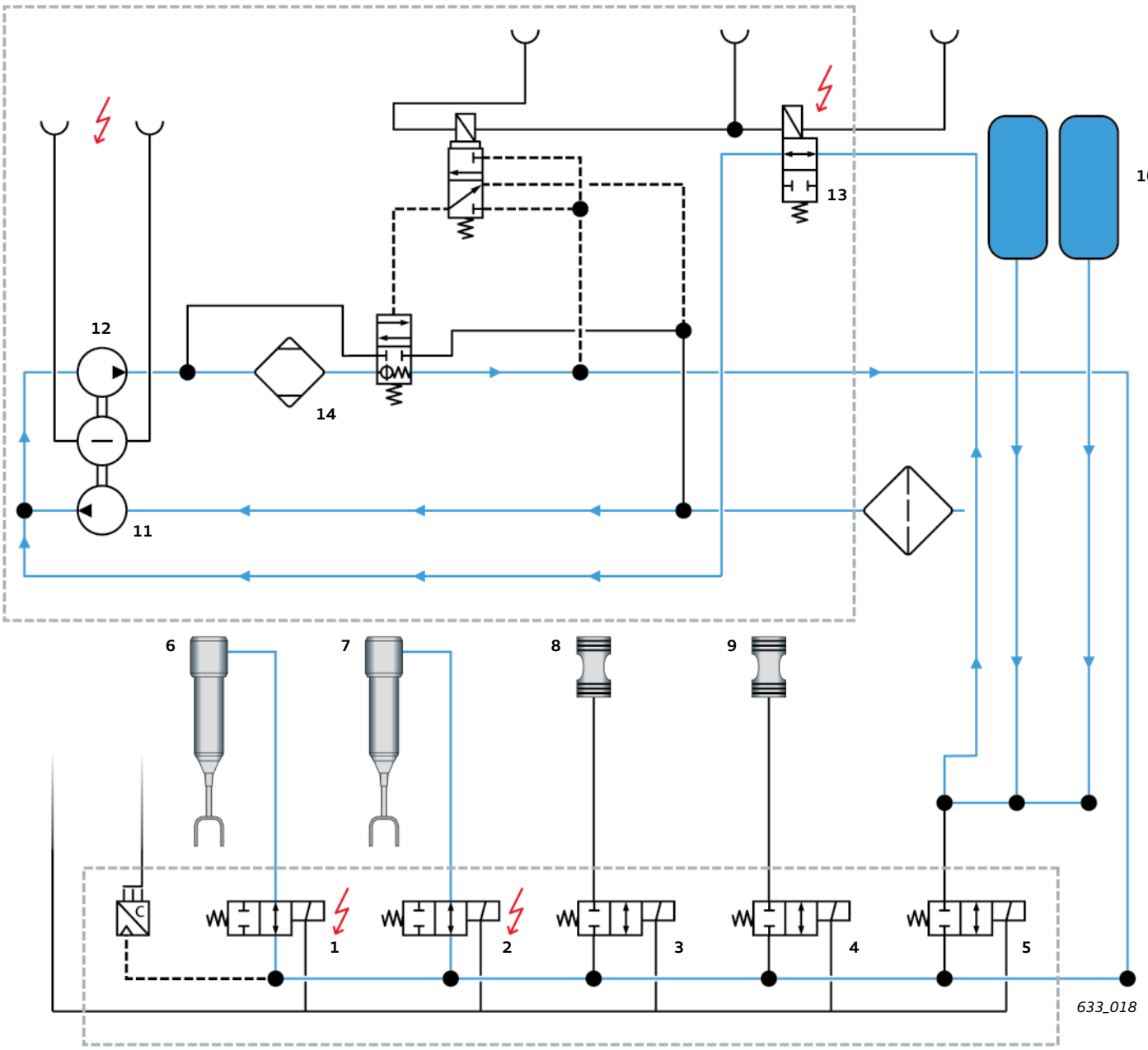

1-5 = solenoid valves
6,7 = air suspension, front axle
8,9 = air suspension, rear axle
10 = pressure accumulator
11 = 1. compression stage
12 = 2. compression stage
13 = solenoid valve for boost function
14 = air drier

When the vehicle exceeds a speed of approx. 30 kph, control operations are preferably implemented by producing pressure using the compressor. For this purpose, the corresponding solenoid valves in the solenoid valve block are activated and the lines interconnecting the compressor and air suspension are opened.
In the example given here, pressure is produced by the compressor with boost function in order to increase ride height at the front axle.
The boost function is a major innovation which provides a rapid increase in pressure when required.
The function uses the pressure accumulator pressure. The compressed air from the pressure accumulators flows into the intake tract of the 2nd compression stage on the compressor. This serves to increase the pressure of the 1st compression stage 11.

The boost function is active whenever the pressure in the pressure accumulators is insufficient for control purposes, but is greater than 5 bar. If the pressure in the pressure accumulators drops below 5 bar during an active control phase, the control operation is not cancelled, but rather is completed.
The boost function increases the capacity of the compressor. Without this function, the compressor would have to be much larger (and therefore also heavier).
The solenoid valve 13 is activated in such a way that the compressed air from the pressure accumulators can flow into the intake tract of the 2nd compression stage on the compressor. Before leaving the compressor, the compressed air flows through the air drier 14, which extracts moisture from the air.

Lowering the ride height (using the rear axle as an example)

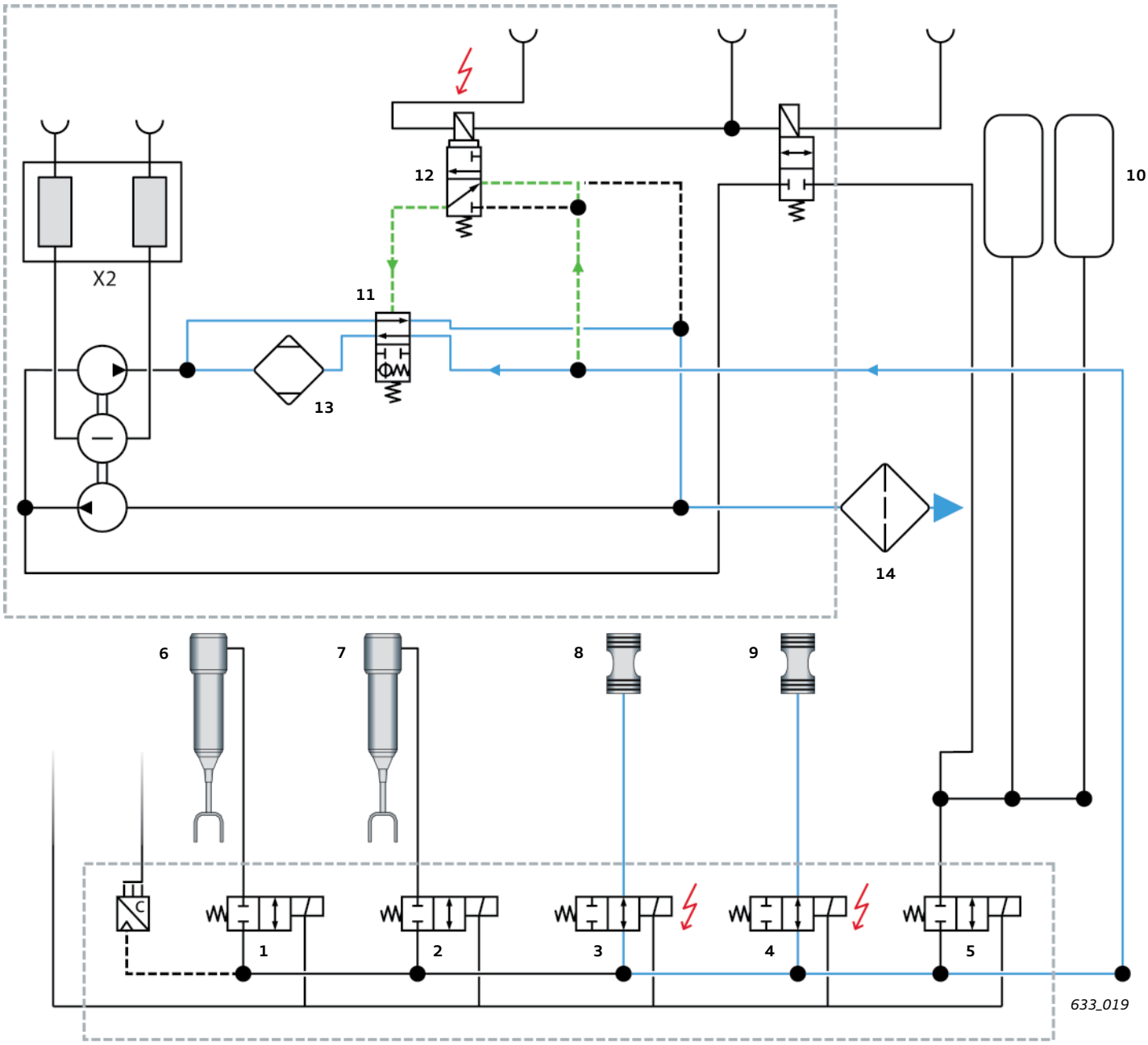

1-5 = solenoid valves
6,7 = air suspension, front axle
8,9 = air suspension, rear axle
10 = pressure accumulator
11 = pneumatic switching valve
12 = solenoid valve
13 = air drier
14 = intake and ventilation connection

The lines interconnecting the compressor and air suspension are opened by activating the solenoid valves 14 in the solenoid valve block. To allow the compressed air to escape from the air suspension, the pneumatic switching valve 11 must be opened. This is done by activating the solenoid valve 12. The solenoid valve opens and pressure is applied to the pilot connection of the pneumatic switching valve. The switching valve is switched to the open position.

The air flows through this valve and leaves the system through the intake/ventilation connection. The dry air flows through the drier and extracts the moisture in the air from the system.

Control strategy for chassis 1BK without trailer operation
The control algorithms generally differ depending on the chassis versions. Differences also exist with regard to operation with and without a trailer

In general, it is not permissible to reduce the vehicle level to the low setting when towing a trailer in order to avoid variation in the load on the tow bar.

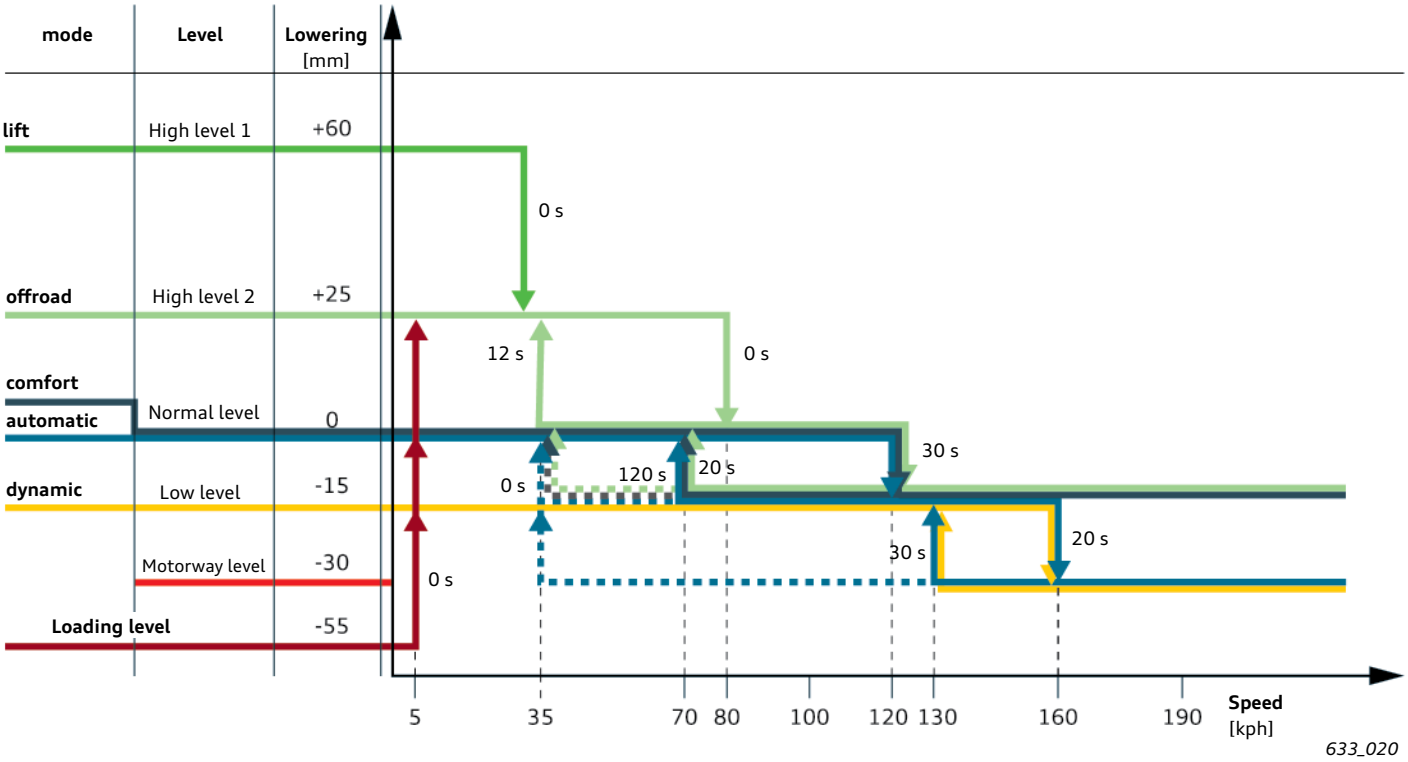

As an example, the control strategy outlined above is explained. In principle, the control system implements six different vehicle levels. Starting from the basic level, "offroad" mode can be set by raising the vehicle 25 mm. The mode is immediately deactivated automatically when the vehicle reaches or exceeds a speed of 80 kph. If the vehicle's speed is subsequently reduced to 35 kph, the vehicle level is automatically readjusted to "offroad" level. The maximum ride height (+60 mm) is achieved by activating "lift" mode. This mode is exited automatically when a speed of 30 kph is reached and "offroad" mode is activated.
The basic level is used by two modes: "comfort" mode and "auto" mode. In "comfort" mode, suspension and damping are configured for maximum ride comfort. If a speed of 120 kph is reached, the ride height is lowered by 15 mm (vehicle level in "dynamic" mode) after 30 s, both in "auto" mode and in "comfort" mode.

If the speed is again reduced, the basic level is restored after 20 s in "comfort" mode at 70 kph and after 120 s in "auto" mode. If a speed of 160 kph is reached after the vehicle level is reduced to dynamic level, the vehicle level is reduced by a further 15 mm (motorway level) in "auto" mode and in "dynamic" mode. If the driver subsequently reduces speed, the system returns to dynamic level after 30 s at 130 kph. The Audi Q7 also has a feature which assists loading. The rear end lowered by a further 55 mm relative to the basic level. If the loading level is not deactivated again by the driver, this is done automatically immediately after reaching a speed of 2 kph. The ride height is then readjusted to the last level set prior to loading.

Control strategy for chassis 2MA (sports chassis)
The basic ride height has been reduced by 15 mm compared to chassis 1BK. The ride height in "dynamic" mode has also been reduced by 15 mm compared to 1BK, and likewise the ride height is not lowered in "comfort" mode.

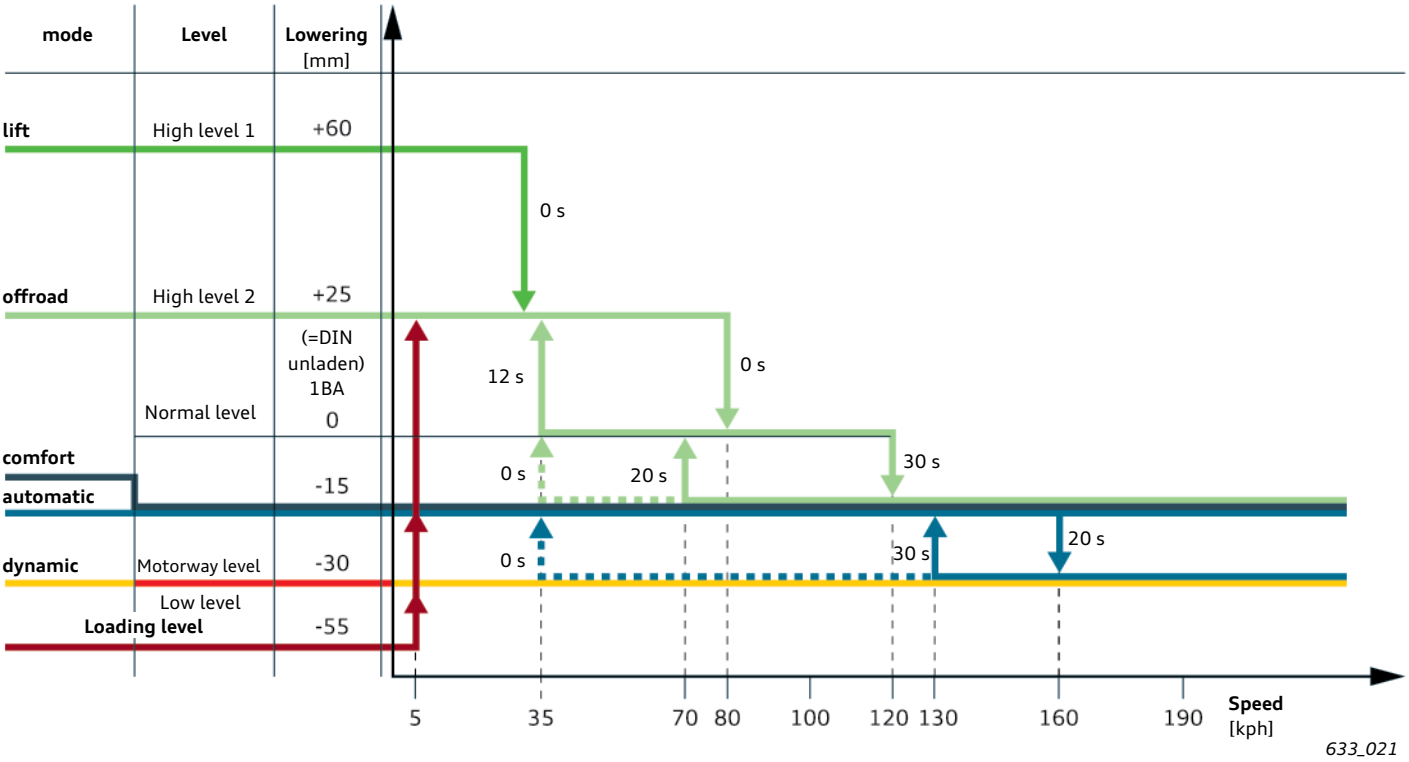

Operation and driver information

Different suspension and damping control modes are implemented on the Audi Q7. They can only be set by selecting the relevant mode in Audi drive select. Depending on preference, the driver can choose between comfortable ("comfort"), sporty ("dynamic") and balanced ("auto") damping setups. Alternatively, the driver can select "offroad" mode for driving under offroad conditions or "lift" mode for even more difficult terrain. The rear end can be lowered in order to simplify loading and unloading.
If "efficiency" is selected, the "auto" mode is activated. As usual, the individual setting combines various settings of different vehicle systems.



633_022

Lowering the rear end makes it easier to load the vehicle. Starting from the ride height in "auto"
mode, the rear end is lowered by approx. 55 mm.

Conditions for the activation of rear end lowering:
- All doors are closed.
- Terminal 15 "on"
- The pressure accumulator is sufficiently filled.

The function is operated using the push button in the luggage compartment.

The rear end is again raised into the starting position by:
- pushing the button.
- selecting a different mode in Audi drive select.
- exceeding a driving speed of approx. 2 kph.

The status of the system is indicated to the driver by a warning lamp in the button. This lamp is lit while lowering is in progress and when the rear end is lowered. If the pressure in the pressure accumulator is too low, the warning lamp will briefly flash 3 times.



633_022a

System faults are indicated to the driver by the familiar yellow or red warning symbol in conjunction with a text message.



633_023

Service operations

Diagnostic address
The system can be accessed in the diagnostic tester under address 74 - suspension control.
Control unit J775 is integrated in the component protection system.
Coding is carried out online.



633_006

Reprogramming the default suspension height
After removing / installing or replacing the control unit, it is necessary to reprogram the default suspension height and to calibrate the sensors in the control unit on completion of encoding. This can be done by configuring separate basic settings on the diagnostic tester, but also by starting a complete cycle.
The vehicle must be at rest (no persons in the vehicle with the doors closed) throughout the entire process.
The process of programming the default suspension height begins by raising the vehicle on a hydraulic hoist and by moving the dampers into the access position. The measurement data supplied by the level control system sensors is evaluated and stored.
The vehicle is then set down on its wheels again and automatically adjusted to a defined level by the control unit.
With the vehicle in this position, the mechanic measures the heights and enters them into the diagnostic tester for each of the individual wheel positions.
The control unit then adjusts the vehicle to the normal level within a close tolerance and activates the control system.
The axle load is then calibrated automatically.
After the normal vehicle level has been set, the sensors in the control unit are calibrated. For this purpose, the vehicle must be at rest on a level surface. On completion of calibration, all control options will be available.

The default suspension height is programmed after:
- replacing the chassis control unit J775
- removing / replacing one or more level control system sensors
- performing work on the chassis which involves detaching the lever of the level control system sensors on the axle carrier
- replacing / removing and installing the dampers



633_025

Actuator diagnostics

The following actuator diagnostics routines are available:

- Actuator diagnostics for lowering vehicle
  - Testing the air spring seal, hoses, level control system sensor for signal / adjustment direction
- Actuator diagnostics for damper valve energisation
  - Electrical damper activation
- Actuator diagnostics for system testing of boost function
  - Testing of solenoid valves for boost function
- Actuator diagnostics for system testing of compressor pressure accumulator
  - Testing pressure buildup, compressor activation and pressure accumulator solenoid valve



633_025b

Manoevring aid set VAS 741013

Vehicle transportation

To be able to transport the vehicle with air suspension fully evacuated, use is made of a new special tool - manoeuvring aid set VAS 741013. The tool is pushed under the vehicle in the position where the air suspension is evacuated so that one roller is in front of the wheel and the other behind it. The rollers are moved towards one another by operating the foot lever until the wheel is raised off the ground. The vehicle can then be moved on the rollers of the special tool and the other wheels. The 4 manoeuvring aids shown here belong to the set.

Note: the vehicle must not be moved or driven under engine power using VAS 741013.

Loading mode

When the loading mode is activated, the high level is set in order to maximise ground clearance.
The loading mode can be deactivated again using the diagnostic tester. Alternatively, the loading mode is deactivated automatically when the vehicle exceeds a speed of 100 kph or after travelling a distance of 50 kph.

Transport mode

When the transport mode is activated, no further control operations are performed and the damper control function is deactivated. The control function is restored when the engine is started.

Brake system

Overview

The Audi Q7 is equipped with a generously dimensioned brake system which offers a high performance reserve. The front axle wheel brakes have lightweight aluminium calipers and lightweight discs. Increased brake caliper rigidity conveys a direct and sporty braking feel. All brake pads already meet the highest environmental standard, which stipulates the use of copper-free brake pads and does not come into force until 2021.

The paint coating on the brake discs contributes to the outstanding appearance of the vehicle.
The Audi Q7 is now equipped with the electronic parking brake (EPB). The foot controls and the brake servo are new developments designed with a strong emphasis on weight saving. The Audi Q7 features the new ESC system (ESP 9) by Robert Bosch AG - a high-performance stability control system.

Wheel braking systems

Front axle wheel brake system

Engine type	V6 3.0 TFSI 245 kW V6 3.0 TDI 200 kW 7-seater	V6 3.0 TDI 200 kW 5-seater
Minimum wheel size	18“	17“
Brake type	AKE fixed caliper brake	AKE fixed caliper brake
Number of pistons	6	6
Piston diameter	30/36/38 mm	30/36/38 mm
Brake disc diameter	375 mm	350 mm

Wheel brake AKE (fixed caliper brake)



633_046

Rear axle wheel brake system

Engine type	V6 3.0 TFSI 245 kW V6 3.0 TDI 200 kW 7-seater	V6 3.0 TDI 200 kW 5-seater
Minimum wheel size	18“	17“
Brake type	TRW PC44HE	TRW PC43HE
Number of pistons	1	1
Piston diameter	44 mm	43 mm
Brake disc diameter	350 mm	330 mm



633_047

Electromechanical parking brake (EPB)

An important new feature of the Audi Q7 is the electromechanical parking brake. In terms of design, function, operation and service operations, the system is identical to that used in current Audi models. The software for activating the actuators is integrated in the ABS control unit J104.

For detailed information about the design, function and service operations, please refer to Self Study Programme 612.



633_049

Brake servo, master brake cylinder, pedal assembly

A size 9/9 tandem brake servo is used on the Audi Q7 in both left and right hand drive markets. This TRW brake servo is a new development. Compared to the 9/10“ brake servo of the previous Q7 model, a great deal of weight has been saved by using aluminium as a housing material. The brake light switch is a carry-over from the transverse platform (Audi A3, Q3, TT) and is mounted on the tandem master brake cylinder. The brake circuit layout is new: The front and rear axle wheel brakes on the Audi Q7 have separate brake circuits ("black-and-white" configuration; the configuration in the previous model is diagonal).



633_050

The pedal assembly is a new development. A strong emphasis was placed on weight saving. The pedestal for mounting the pedals is a die-cast aluminium construction and is bolted to the module cross-member. The brake pedal is made from an aluminium profile, while the accelerator pedal is a plastic construction. The pedals are in a suspended arrangement.



633_051

ESC

System components

The Audi Q7 uses ESP9 - the new generation ESC system by Robert Bosch GmbH. In the hydraulic unit a six-piston pump works in combination with the new hydraulic valves to meet the exacting demands on pressure buildup dynamics. Depending on the trim level, there are two physically different versions of the ESC system. A hydraulic unit with 3 pressure sensors is used for models with ACC. One pressure sensor measures the pilot pressure in the hydraulic system while the other two pressure sensors measure the pressure in both braking circuits. In models without ACC, only the pilot pressure is measured.
The ESC receives information on vehicle dynamics (transverse and longitudinal acceleration and the yaw rate) from the airbag control unit J234 via the FlexRay bus. The relevant sensors are integral to this control unit on the Audi Q7.

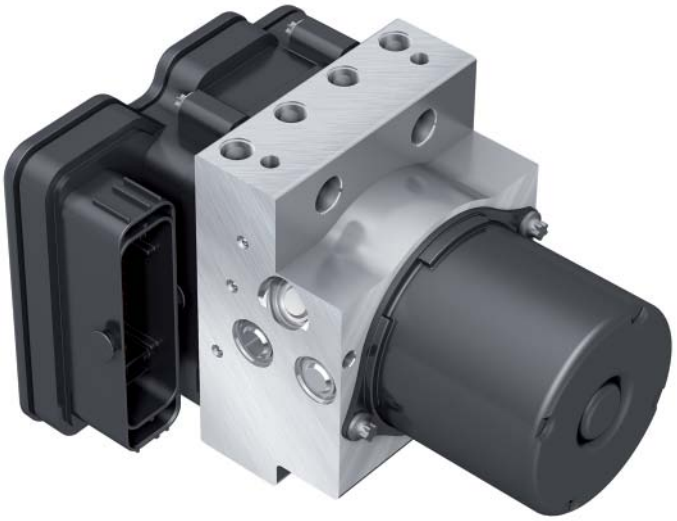

633_052

Active speed sensor with a rotation direction sensing feature are used on the Audi Q7. In terms of design and function, they are identical to the sensors used on the current Audi A6 and A7 models.

The steering angle sender is a magnetic sensor, which is installed in the steering column switch module and communicates via the FlexRay bus. This sender is an improved version of the sender used in the Audi A6 and A7 models. However, the service operations are identical.



633_053

Functional principle

The ESC on the Q7 also performs the basic and additional functions implemented on the current Audi A6, A7 and A8 models. For detailed information about this system, please refer to Self Study Programme 475. In addition, other driver assist and safety systems have been networked. This enables trailer assist and turn assist (available for the first time in the Audi Q7) to request corrective braking inputs from the ABS control unit J104.

The Audi Q7 is equipped as standard with the Hill Hold Control (HHC) assistance function. The hold time is approx. 2s, after which the brake is released again and the driver must brake the vehicle himself if required.

The Hill Start Assist function has been improved for the Audi Q7. The switch-activated function holds the vehicle stationary if the driver brings it to a standstill by applying the service brake. The function stays active even after the vehicle in driven away again with a forward gear selected. If, on the other hand, the vehicle is driven away again in reverse after stopping and exceeds a speed of approx. 2 kph, Hill Start Assist is automatically deactivated. This innovation significantly improves comfort during manoeuvring and parking. If the vehicle subsequently exceeds a speed of approx. 10 kph when driving forwards, the function is automatically reactivated.



633_054

Operation and driver information

Offroad mode can be activated by briefly pressing the ESC button (< 3s). In this mode, the scope of TCS and ESC corrective inputs is limited. The control parameters are selected so that the main focus is on traction.



633_055

If the ESC button is pressed for longer than 3 s, TCS and ESC are fully deactivated.

A new function generates a driver warning if the wheel brakes reach a high temperature on descents. The brake temperature can rise rapidly, particularly on descents, if the driver fails to select a gear which does not utilise the full deceleration potential of the driveline.

If the brake servo does not provide sufficient boost, ESC generates additional braking force by actively building up brake pressure. This function is known as the "optimised hydraulic brake servo (OBBS)" and is an integral part of the ESC systems used on Audi models (refer to SSP 475). If a fault occurs in the vacuum supply system for the brake servo or in the brake servo itself, the result is an increased need for "ESC assistance". This information is provided to the driver in the form of the yellow ESC warning symbol. If this warning is given continuously, it is essential to have the brake servo inspected by a service centre. In the Audi Q7, for the first time, the warning symbol changes colour from yellow to red if the driver ignores the warning for a lengthy period of time (after a defined number of driver braking inputs).

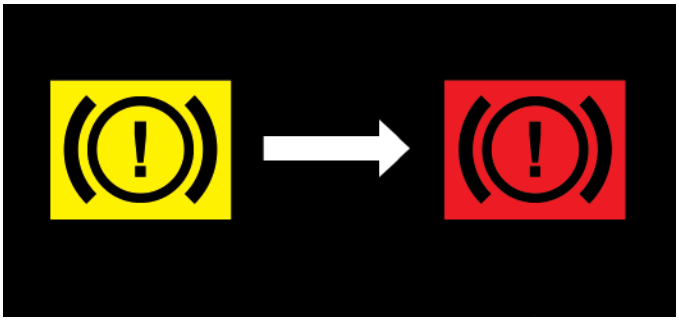

633_056

Service operations

The ESC service operations defined for the Audi Q7 are essentially identical to those of the current Audi A6, A7 and A8 models.

The control unit and hydraulic unit can be separated by service personnel and, therefore, can also be replaced separately. A condition is the use of workshop equipment VAS 6613 in order to protect the electronic components of the control unit against static charge buildup.

After venting the brake system, it is necessary to encode the new control unit online and to calibrate steering angle sender G85 (as an integral part of the steering column electronics).
3 further basic settings follow:

- Check for interchanging of the connected hydraulic lines (the vehicle must be elevated on the hydraulic hoist for this purpose)
- Basic setting of electrical parking brake (EPB)
  For this purpose, the brake is fully opened and closed again once only (previously: 3 opening and closing cycles).
- Basic setting of tyre pressure indicator (TPI)
  The final control diagnostics conclude the test plan for system function test purposes.

The steering angle sender G85 does not lose its calibration after disconnecting terminal 30.

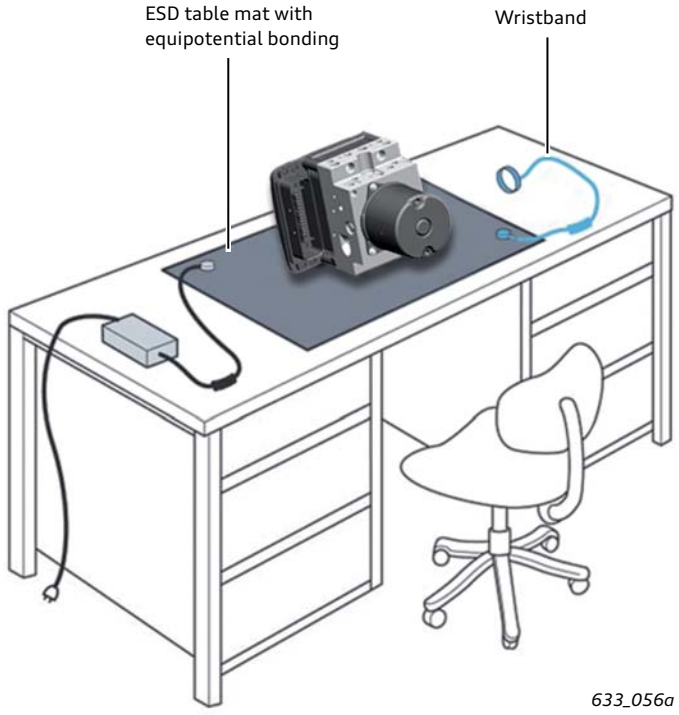

633_056a

Workshop equipment VAS 6613

Steering system

Overview

The Audi Q7 now also has electromechanical steering (EPS). Special steering maps which can be configured with Audi drive select were developed.
A mechanically adjustable steering column is standard and an electrically adjustable steering column is optional.

The standard trim comprises a newly developed four spoke steering wheel. Two three spoke steering wheels are custom options.

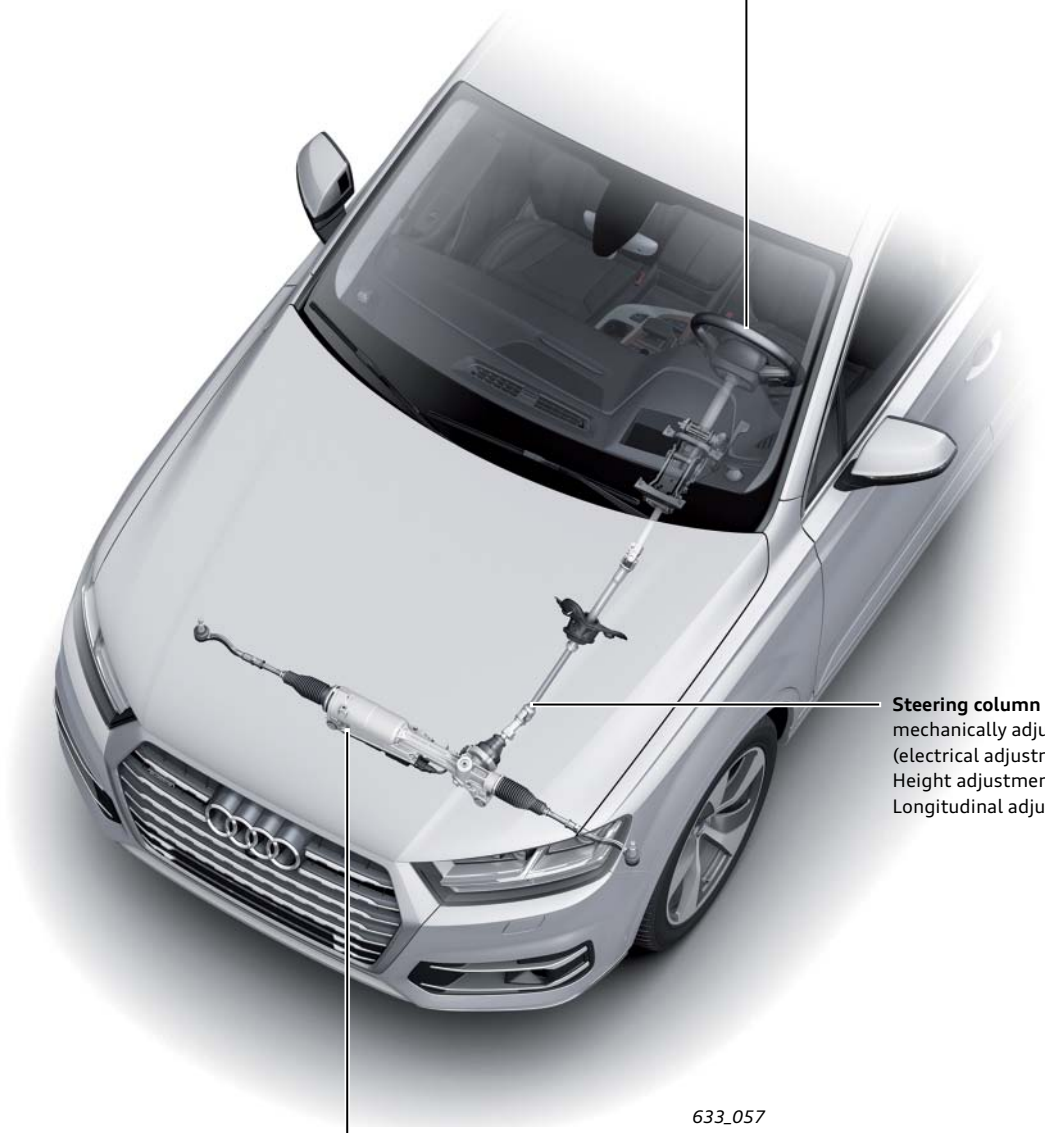

Steering wheel
Four spoke steering wheel as standard
Three spoke steering wheel as option

Steering column
mechanically adjustable
(electrical adjustment is optional)
Height adjustment: ± 20 mm
Longitudinal adjustment: ± 34 mm

Electromechanical power steering (EPS)
Use of Q7 specific maps

System components and operation

Electromechanical power steering (EPS)
In terms of design, function and service operations, the electromechanical steering system is identical to the system already used on the current Audi A6, A7 and A8 models.
Refer to Self Study Programme 612 for detailed information.



633_058

They can only be set by selecting the relevant mode in Audi drive select. Depending on whether "auto", "dynamic" or "comfort" mode is selected, the system activates steering maps which provide balanced, dynamic or comfort-oriented steering assistance. When "individual" mode is selected, the driver can freely select one of 3 maps. When "efficiency" and "allroad" mode are selected, the map for "auto" mode is activated. When "offroad/lift" is selected, the map for "comfort" mode (comfort-oriented) is utilised.



633_022

Steering column
In terms of design and function, the mechanical and electrical steering columns are identical to those used on the Audi A6 and A7 models. The following major detail modifications were made:
The foot controls are attached to the module cross member, and no longer to the steering column bracket, allowing a more filigree bracket design to be realised. This, in combination with further lightweight design measures including the steering shaft, provides a weight reduction of approx. 2 kg.
The steering lock attachment has been modified in order to increase anti-theft security.
The control unit for activating the control motors of the electrical steering adjustment system is connected to the control unit by a plug (it is bolted on the A6 and A7).
The electrical connections are now on the steering column.



633_058a

Steering wheel
A four spoke steering wheel is standard. Two variants of the three spoke steering wheel are optional. The steering wheels are available in various colours with colour-coordinated stitching. All available steering wheels are leather bound.

There are differences in regard to the decorative trims used. As the Audi Q7 is exclusively equipped with tiptronic, all available steering wheels have tiptronic paddles. The four spoke steering wheel and the three spoke steering wheel can, as an option, be ordered without a flat bottom with heater.



633_059a

Four spoke steering wheel

Three spoke steering wheel without flat bottom

Three spoke steering wheel with flat bottom

All-wheel steering

Overview

For the first time in Audi models, all-wheel steering is optional on the Audi Q7. Depending on the actual speed of the vehicle and the driving situation, the tracking is adjusted dynamically with the aim of improving driving dynamics and ride comfort. The control process generally comprises 2 different steering operations: parallel steering and countersteering relative to the steered front wheels.



633_027

Countersteering
One of the key aims for countersteering the front and rear wheels is to improve handling at low speeds and to reduce the travel envelope of the vehicle. The advantage for the driver is that less steering effort is required given the same curve radius and the same speed. The vehicle is subjectively much more manoeuvrable and agile. To make full use of the advantages offered by the system, countersteering is only activated in the low speed range (up to approx. 60 kph).

The graphic shows the advantage of all-wheel steering using the smallest turning circle as an example. Radius R2, which is achieved using all-wheel steering, is much smaller than the radius (R1) achievable with traditional steering.

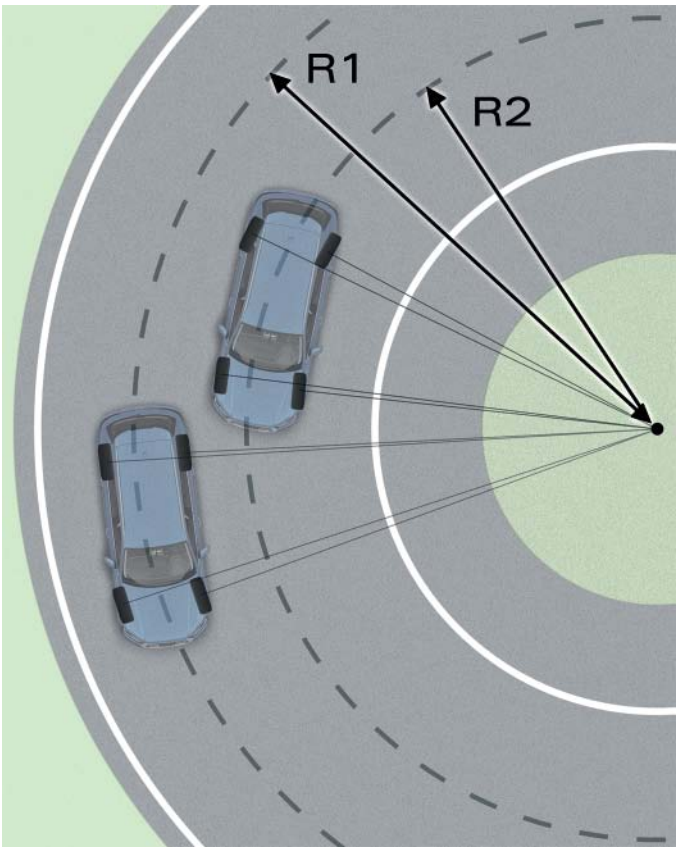

633_028

Parallel steering (in same direction)

1. Steering manoeuvre with a front-steered vehicle

Fig. 1:
The driver executes a cornering manoeuvre or a change in direction by turning the front axle wheels inwards using the steering wheel. The front wheels begin to transmit lateral friction force due to the (enforced) deformation of the tyre contact surface when turning the wheels inwards.

To generate yaw motion about the vehicle's vertical axis, the rear wheels must be able to absorb sufficient lateral friction force.

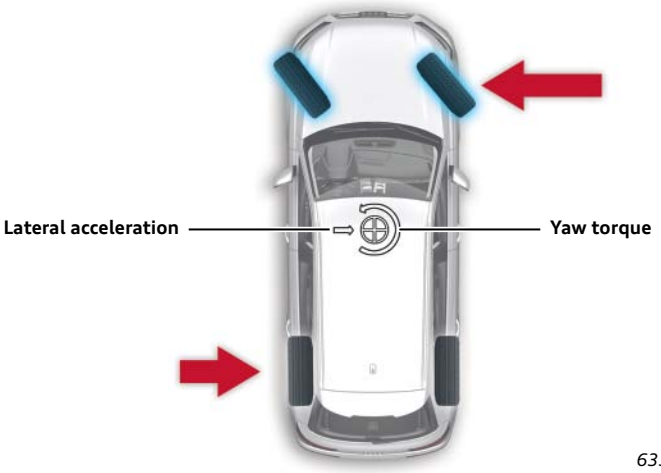

633_029

Fig. 2:
The lateral friction force now changes direction due to the mass of the vehicle pushing towards the outside of the corner, with the result that lateral acceleration can now be generated.

Initiating the change in direction of travel at the front axle alone produces a relatively high yaw torque (torque about the vehicle's vertical axis) until a steady-state condition has been reached. This can have a detrimental effect on comfort and cause the vehicle to become unstable. If for example the driver performs a sudden steering movement in order to avoid an obstacle, unintentional vibration about the vehicle's vertical axis can adversely affect driving stability.



633_030

2. Steering manoeuvre with a rear-steered vehicle

Fig. 1:
The driver executes a cornering manoeuvre or a change in direction by turning the front axle wheels inwards using the steering wheel. The system responds to the steering input by initiating parallel steering of the rear wheels. Because of the (enforced) deformation of the tyre contact surfaces at all 4 wheels, the equidirectional lateral friction forces take effect parallel to the front axle wheels due, also, to the rear wheels. The resulting yaw torque is much lower than in a vehicle with front-steered wheels only. The immediate buildup of lateral (cornering) force at both axles signficantly reduces the transition time from the initial steering input to the steady-state condition - a well-known effect which occurs in purely front-steered vehicles. The change in the direction of travel is initiated much more harmoniously and comfortably and the danger of yaw oscillation is reduced

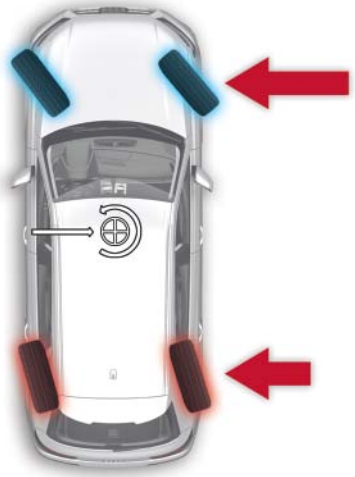

633_031

Fig. 2:
A steady-state condition has been reached and the vehicle is following the trajectory defined by the driver.



633_032

Lateral friction forces

Countersteering of the rear wheels is employed in the low speed range while parallel steering is employed at higher speeds.

In addition to the above-mentioned advantages, the system also limits the yaw rate when the driver takes sudden evasive action. In these situations, overproportional parallel steering of the rear wheels helps to increase driving stability.

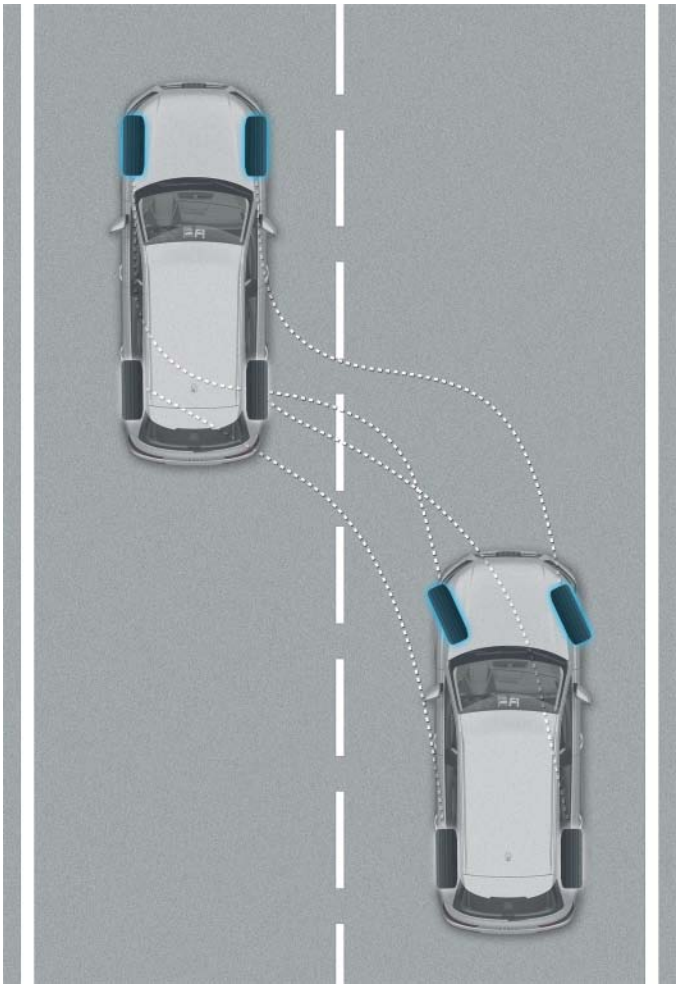

633_033a

Evasive action/lane change of a car with conventional steering.

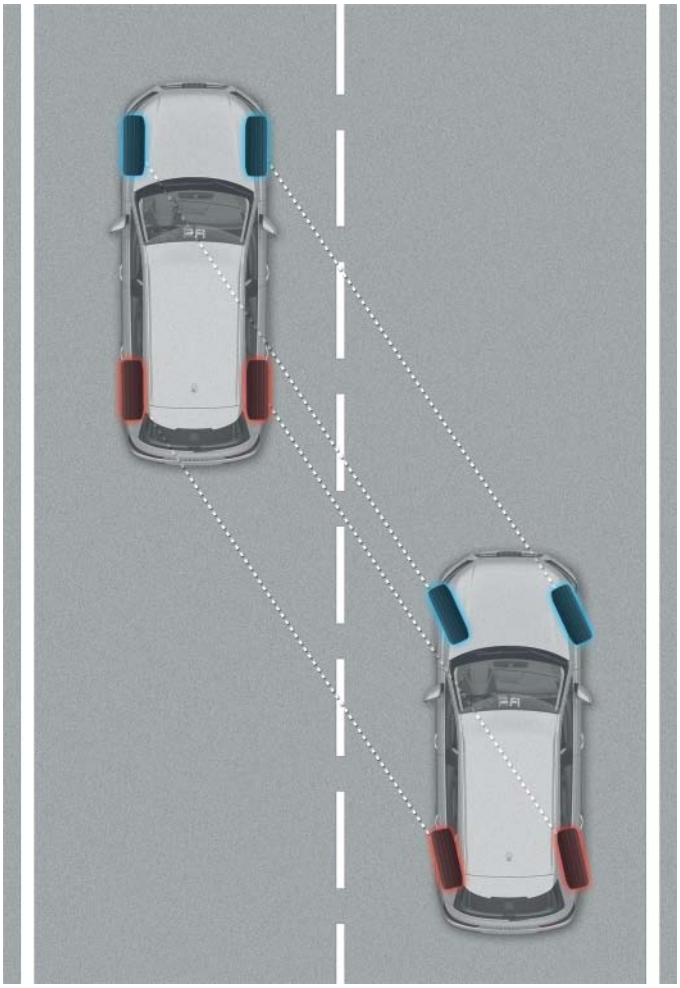

633_033

Evasive action/lane change with all-wheel steering.

Technical implementation

The tracking values of the rear wheels are modified by an active control element. As with a conventional rear axle, the track rods are mounted in rubber-metal bearings on the wheel carriers. They are not attached directly to the subframe like a conventional axle, but are attached to both sides of the control element by rubber-metal bearings.

The entire unit comprising the control element, drive and electronic controller is attached to the subframe and simultaneously steers both wheels through the same angle. Given that the maximum tracking angle adjustment is only approx. 5 °, it is not necessary to use a pivot bearing on the front axle. The angular adjustments are realised by utilising the elasticity of the link/wheel carrier bearing elements.

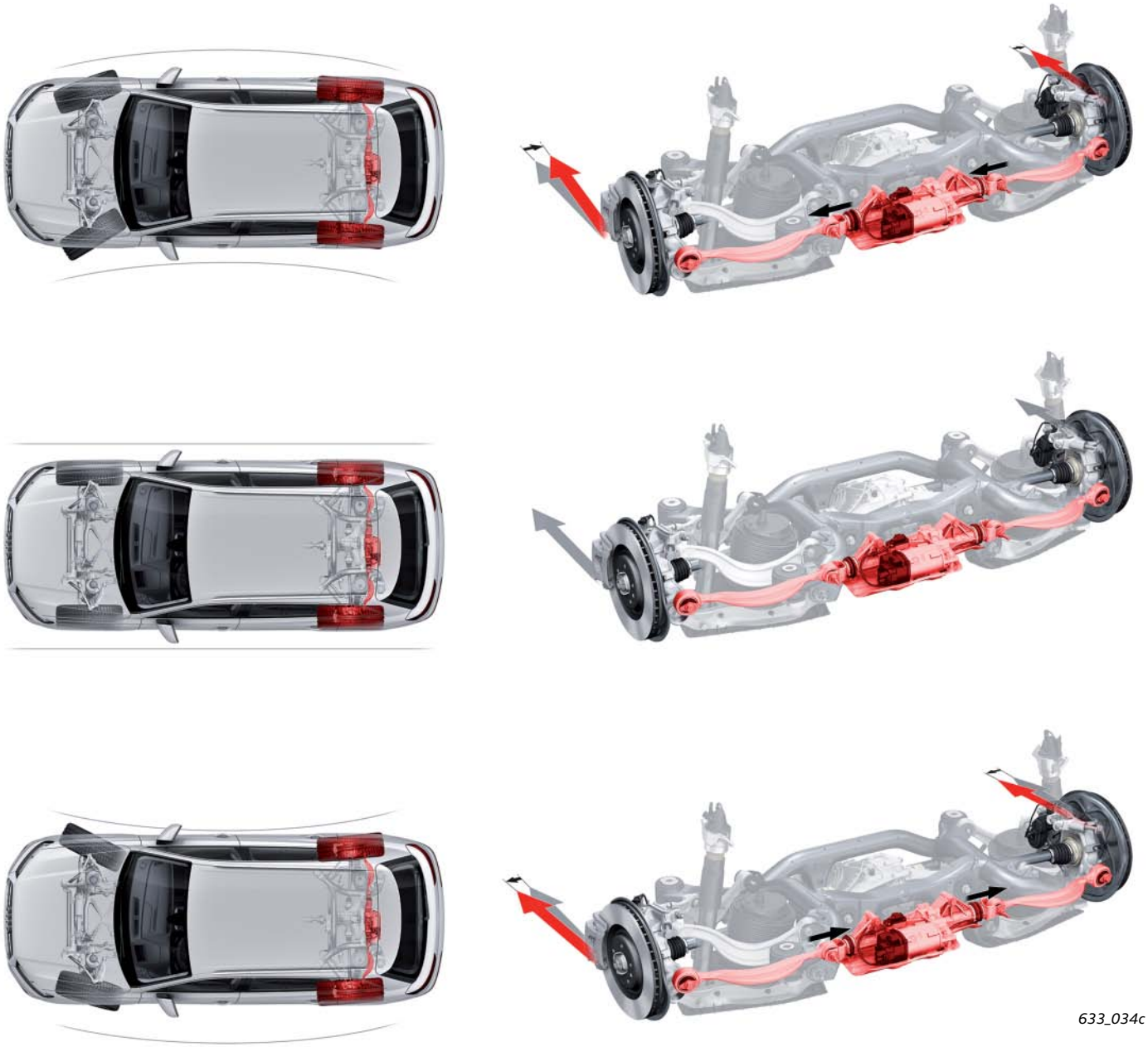

633_034c

System components

Spindle drive

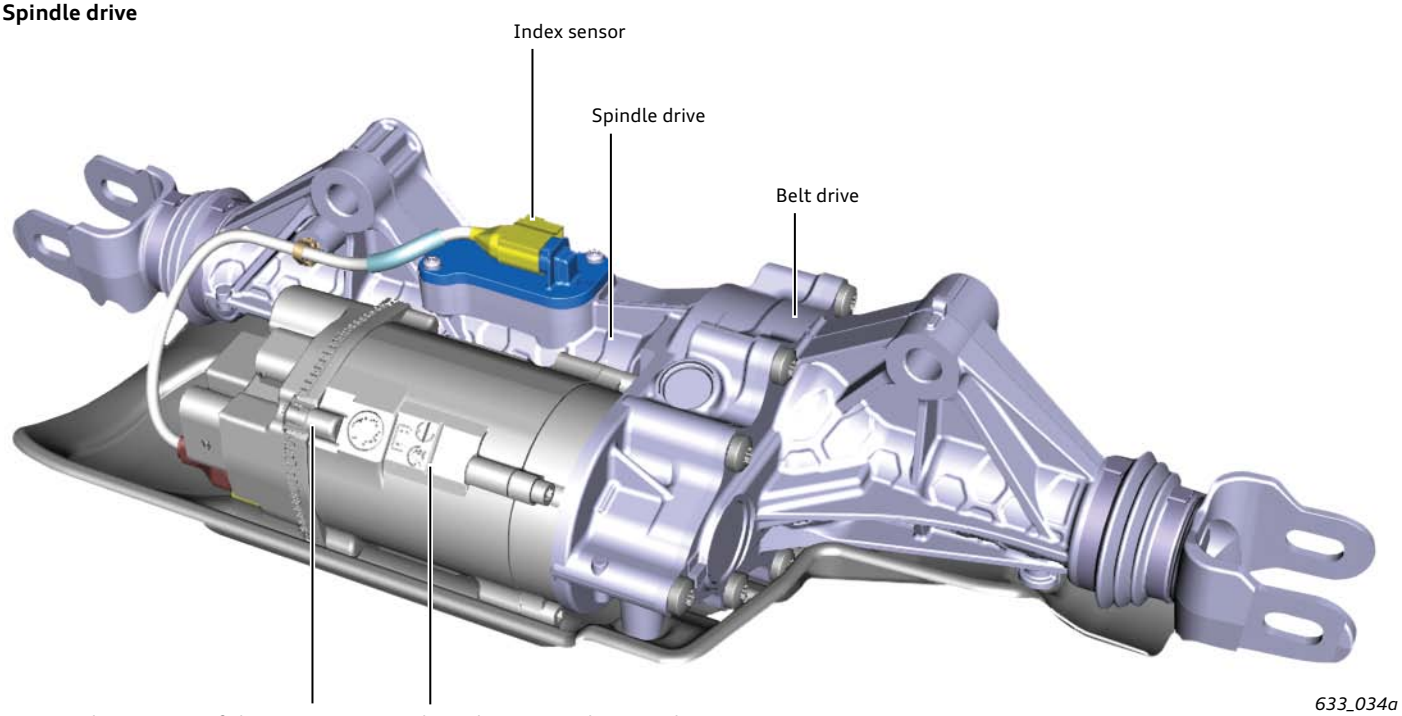

633_034a

The electric motor drives the spindle nut via the drive belt. The rotational movement of the spindle nut is converted to linear movement of the spindle. The connected track rods transmit the linear movement to the wheel carriers and the wheels are steered in parallel to the right or left (depending on the direction of rotation of the electric motor). The system is self-locking due to the transmission ratio and the trapezoidal thread of the spindle and the spindle nut.

The electric motor is only activated during the adjustment process and otherwise stays inactive. The stopping forces are generated solely through the self locking of the screw drive.
The maximum adjustment travel of the spindle (from the centre position) is approx. 9 mm, which is equivalent to a maximum wheel lock of approx. 5 °

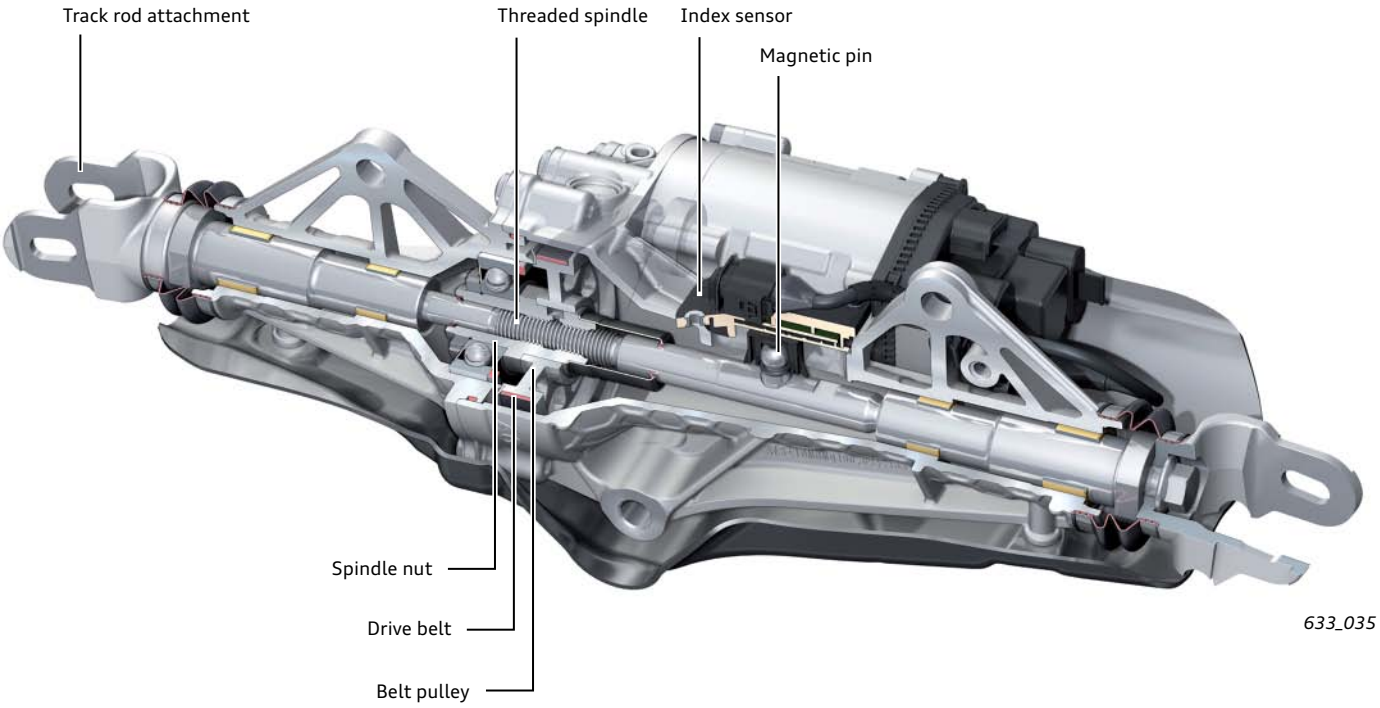

633_035

Index sensor

The index sensor senses the zero position, i.e. the "centre position", of the spindle drive in the non-steered/neutral state. The sensor works on the basis of the Hall-effect principle. For this purpose, the spindle has a pin to which is attached a permanent magnet. Spindle position sensing is performed in an analog fashion within a small angular range about the zero position. The actual Hall effect sensor is preceded by a 2 additional Hall effect switches on the sensor PCB. These switches are used to detect the direction of movement of the spindle.

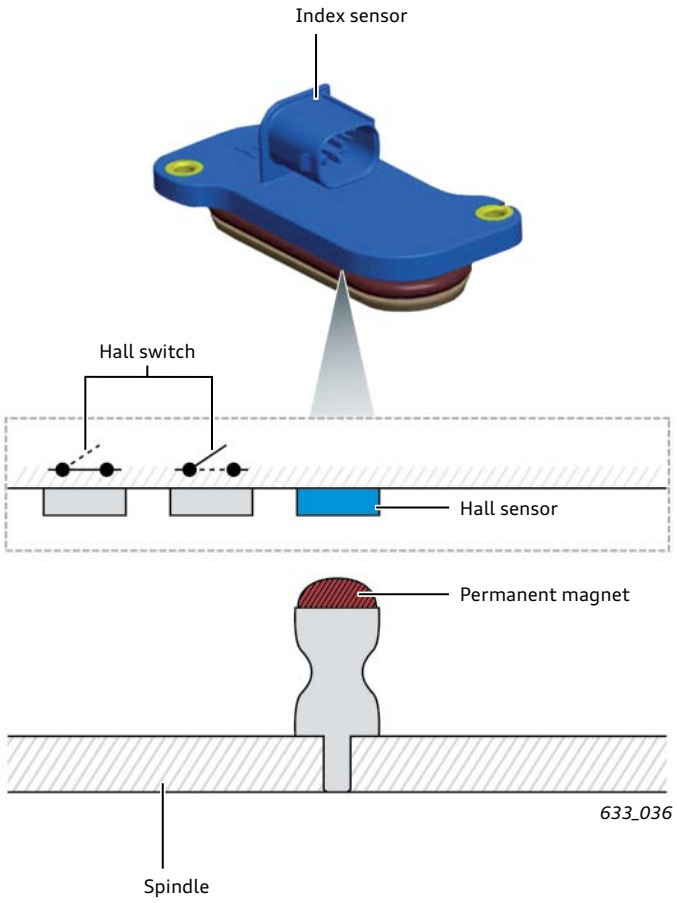

Electric motor

A brushless three-phase AC synchronous motor is used as a drive. The three-phase current is produced by an AC/DC converter in the drive unit.

A rotor position sensor is integrated in the motor. This sensor determines the position of the rotor with high precision.

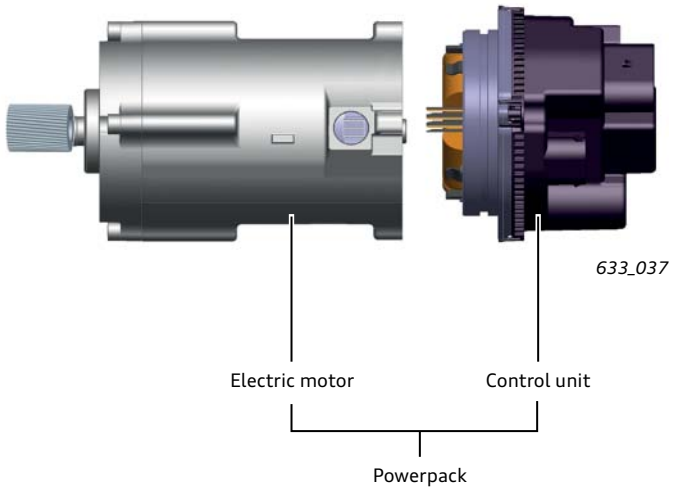

Rear steering control unit J1019

The control unit and the drive unit are bolted to the electric motor as a compact unit sealed against water spray and moisture. The control unit is connected to the FlexRay bus as a low-ohmic end user. It computes the drive currents required for the electric motor on the basis of defined input information. An AC/DC converter supplies the alternating voltage to drive the motor.

Function of the overall system

The rear axle steering system generally requires the following measurement data/information:

- **Wheel speeds**

Information on wheel speeds is placed on the FlexRay bus in the form of a message from the ABS control unit J104. From this, the rear axle steering control unit J1019 determines the vehicle reference speed, which, to provide redundancy, is compared with the vehicle reference speed determined by ESC.

- **Steering angle**

The steering angle is measured by steering angle sender G85 and also transmitted in the form of a message via the FlexRay bus. The control unit determines the required rear steering angle from the "master information", i.e. speed of vehicle and steering angle of front axle wheels.

Behaviour at terminal 15 on

When the ignition is turned on (terminal 15 message via FlexRay), the control unit checks to see if the following requirements for operation of the rear steering have been met:

- The steering assistance provided by the electromechanical steering at the front axle is greater than 20 % of maximum steering assistance.
- The vehicle battery (terminal 30) is connected and intact.
- The control unit and steering unit have not been interchanged (comparison of stored vehicle identification number (VIN) with the VIN of the current vehicle received via the FlexRay bus).
- The rear steering has been correctly programmed/encoded.

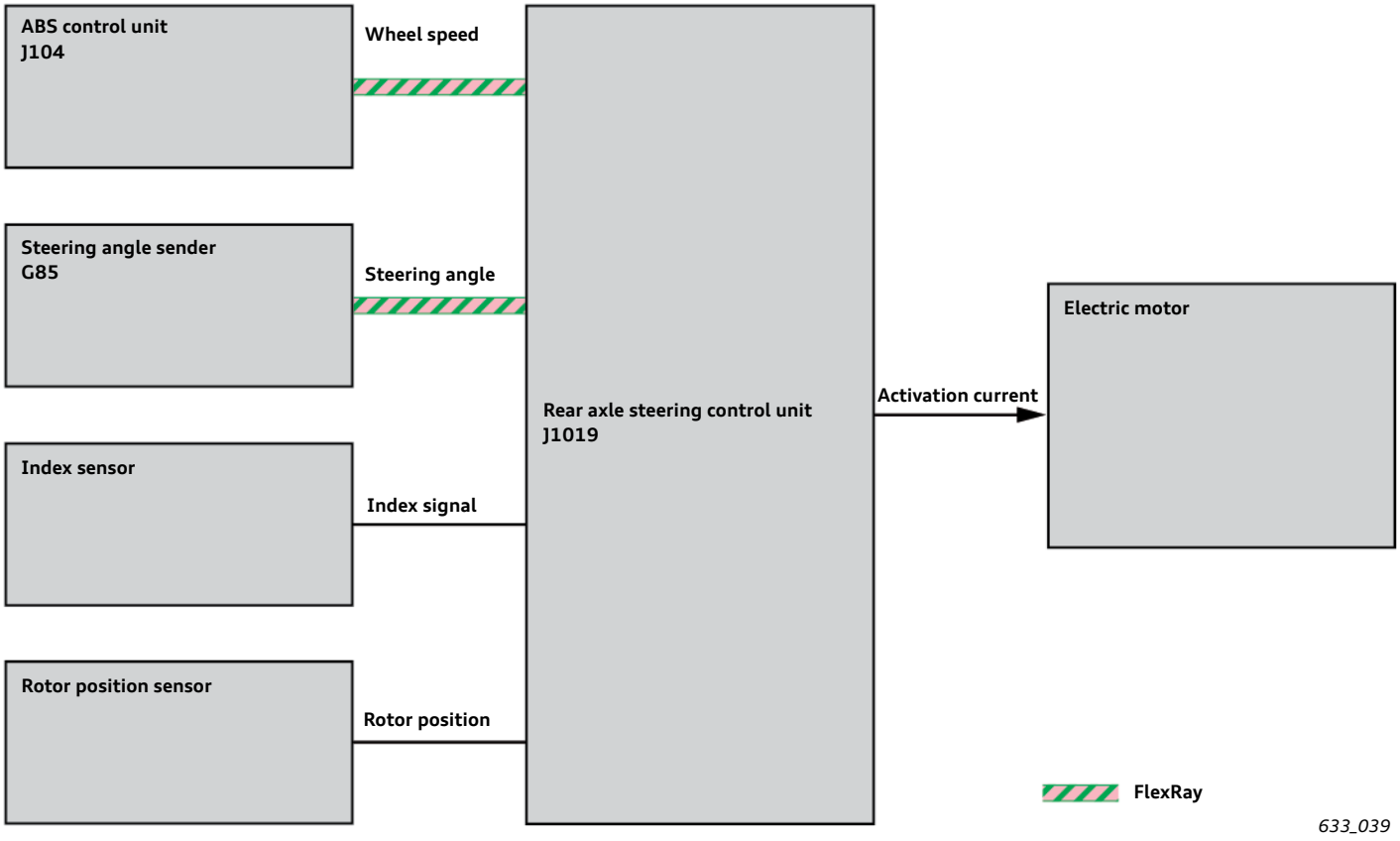

Response to steering inputs by the driver

When the control unit is encoded, maps defining the steering angle of the rear axle as a function of vehicle speed and front axle steering angle are stored in the control unit. The maps differ with regard to the desired steering/driving behaviour (driver input). Depending on the drive select setting selected by the driver, there are various maps which support driving styles ranging from comfort-oriented to sporty.

If steering inputs are made by the driver at low speeds (up to approx. 60 kph [1]), the rear wheels are countersteered relative to the front wheels up to a max. angle of approx. 5 ° [1].

The steering angle of the rear wheels increases with the steering angle of the front wheels (steering angle applied by the driver), with additional allowance being made for the speed of the vehicle.

At higher speeds (upwards of approx. 70 kph [1]), parallel steering movements of the rear wheels are realised with much smaller steering angles.

[1] The specified values differ depending on vehicle type and trim level (depending on application) and serve only to convey a basic understanding of the functional principle.

Basic function

Behaviour when vehicle is stationary

When the vehicle is stationary, the rear wheels are always set to the neutral position (starting position). The exact position is determined by evaluating the measurement data supplied by the index sensor and the rotor position sensor.

In isolated cases, a complete reset may not be possible due to insufficient resetting force. The behaviour described above is mainly due to the load state (higher vehicle weight) and the road surface characteristics (high friction coefficient). In these cases, the rear wheels are reset to the neutral position during the next driving cycle. This "misalignment" is indicated to the driver (refer to owner's manual and driver information).

Additional functions/special operating states

Inputs from other vehicle systems

The Audi parking system (APS) and trailer manoeuvring assist (TMA) may "request" certain rear axle steering angles. The control units in question can specify exact steering angles, which are then implemented by the rear axle steering control unit J1019.

ESC can also influence the rear axle steering. If beneficial to driving stability, ESC can suppress certain steering movements of the rear wheels.

Operation and driver information

The driver can directly influence the function of the rear axle steering by selecting the vehicle behaviour in Audi drive select. Depending on the setting selected, the system supports a sporty, balanced or comfortable steering response.
When "individual" mode is selected, the driver can freely select one of 3 maps. When "efficiency" and "allroad" mode are selected, the map for "auto" mode is activated.

When "offroad/lift" is selected, the map for "comfort" mode (comfort-oriented) is utilised.
The driving mode to vehicle behaviour/map assignments are, therefore, identical to those of the electromechanical front axle steering (EPS).

The driver receives information on the rear axle steering only in the event of system malfunctions. Depending on the weighting of the fault, a yellow or red warning symbol is displayed. This warning symbol is identical to the familiar symbol used already by the electromechanical front axle steering. The following additions are new: "Adapt driving style. Turning circle larger" and "Please stop vehicle. Note distance to side." These texts are only activated in conjunction with faults at the rear axle.



633_042



633_043

Service operations

The rear axle steering system has the production control number (PR number) 0N5.

The diagnostic address is CB.

The system leaves the factory in the starting position (zero position). The starting position is determined/calibrated by the system supplier. It is not necessary to carry out service work on the system for this purpose. The system can only be adapted to the vehicle by setting the tracking values of the rear wheels. This setting is achieved by turning the designated eccentric screws in the same way as on a vehicle without rear axle steering.

Installation and removal/replacement of the steering module
The rear axle steering is only available as a complete module in service centres. No provision has been made for the removal/replacement of individual components.
Care must be taken to ensure exact positioning of the module during installation. This is achieved using a special tool.

Details of the tool and its usage were still pending clarification at the time of going to press. For detailed information, please refer to the current workshop manual.

If the module is not positioned exactly, the positions in the z direction of the track rod attachment points may differ on the left and right hand sides of the vehicle. This will result in unwanted differences in tracking angle on the left and right rear wheels when the springs compress and rebound.
After the module is replaced, the new control unit is encoded online. In the process, the vehicle-specific dataset is downloaded from the vehicle database.
A wheel alignment computer is required for subsequent adjustment the rear axle tracking angles.

Before commencing the alignment procedure, the exact centre position of the steering system is set by performing the basic setting procedure "active steering to centre of steering rack" with the diagnostic tester. The centre position of the steering rack is set with high precision as the tolerance range is much smaller than in "normal operation". An entry is made in the event memory and the yellow warning symbol is activated. On completion of tracking adjustment, the basic setting is deactivated, the event memory entry is cleared and the warning symbol is deactivated after a terminal 15 cycle.

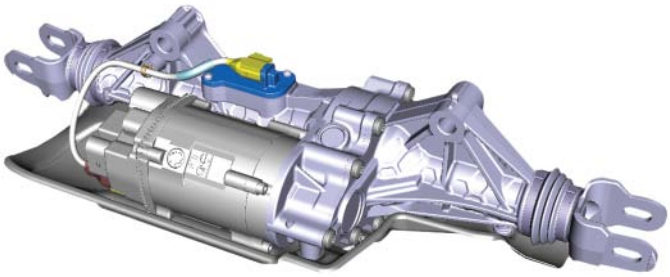

633_044

To interchange modules, it is necessary to carry out the basic setting procedure "reset/program VIN" and to subsequently encode the control unit online.

Note
Please bear in mind that the complaint "steering wheel is skewed" may also be due to inexact setting of the rear axle steering starting position due to system parameters.

Adaptive Cruise Control (ACC)

System overview

The fourth generation ACC is featured for the first time on the Audi Q7. The modified design and extended range of functions provide a significant improvement in comfort. System availability has also been increased. For example, a system shut-down due to insufficient sensor vision now takes effect much later than before. The existing system limitations have been pushed further back by the modified hardware. For example, radar signal reflection (which can lead to misinterpretation when driving through tunnels) has been minimised and is unlikely to cause the system to shut down.

New functions include the system response to stationary vehicles. The measurement data generated by the ACC is an important basis for the new predictive efficiency assist and traffic jam assist functions.
As previously with the A6, A7 and A8 models (including the S and RS models), a master/slave concept with 2 radar units is also implemented on the Audi Q7. As before, each radar unit has its own control unit which is combined with the radar unit. Data is exchanged via the FlexRay bus.



633_060

ADR sender, right G259 and ACC control unit J428 (master)

Left ADR sender G258 and ACC control unit 2 J850 (slave)

Note
Like all other assistance systems, ACC also operates within certain system limits. The responsibility for driving the vehicle in traffic lies with the driver.

Design and basic function of system components

ADR sender, right G259 and ACC control unit J428 (master)
Left ADR sender G258 and ACC control unit 2 J850 (slave)

The physical structure of both radar units is identical and the only differences are of a functional nature in the control unit software. A key modification is the use of six horizontally aligned radar transceiver units and an additional vertical transceiver unit. At close range (up to approx. 150 m), this gives horizontal and vertical radar visibility ranges/coverage of ± 22 ° and ± 3 °, respectively. The range has been extended to about 250 m. The sensors are positioned on the outer extremes of the vehicle in order to extend the visibility range. This makes it possible, for example, to "look beyond" a column of vehicles ahead. Vehicles in adjacent lanes are detected at an even greater distance within the limitations of the system.

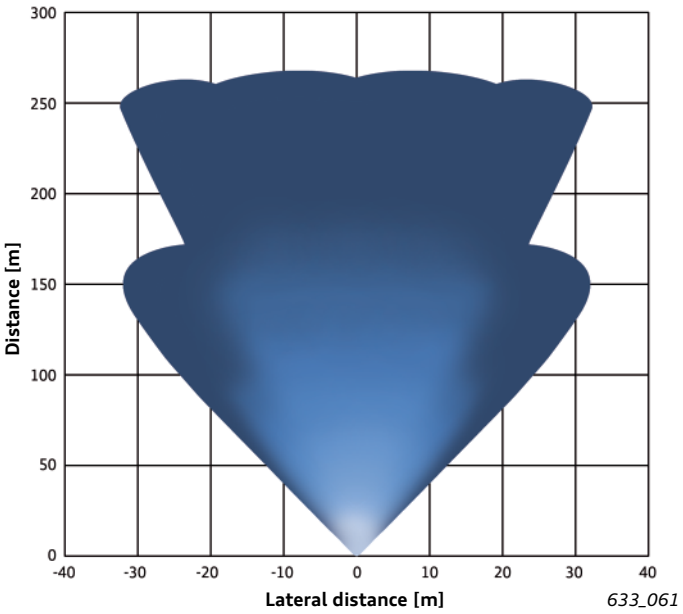

Propagation characteristic of the radar beams

The ACC master and ACC slave are autonomous control units/sensors which independently pick up radar reflection within their radar visibility range. Information is exchanged via the FlexRay bus. The slave supplies the master with measurement data. The information generated by both sensors is collated in the master. The functions available to the driver (ACC, traffic jam assist, Aud PreSense etc.) and the driver information displays are implemented by the driver only. The following figures give an idea of the complexity of the detection and control processes. To function properly, ACC system needs to exchange data with 22 other control units. In the process, the ACC master control unit receives and processes around 1000 signals/messages and itself sends around 500. The ACC slave control unit can simultaneously detect up to 32 objects.

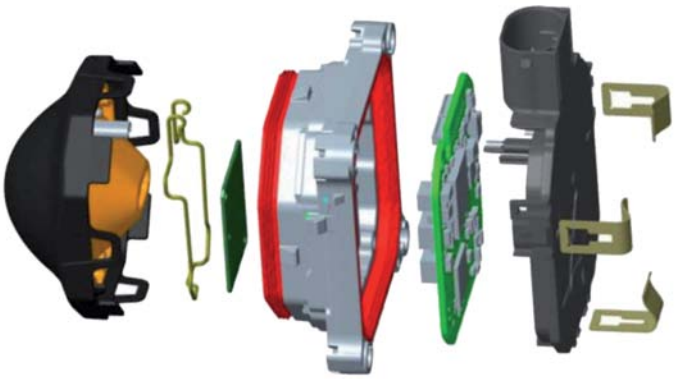

633_062

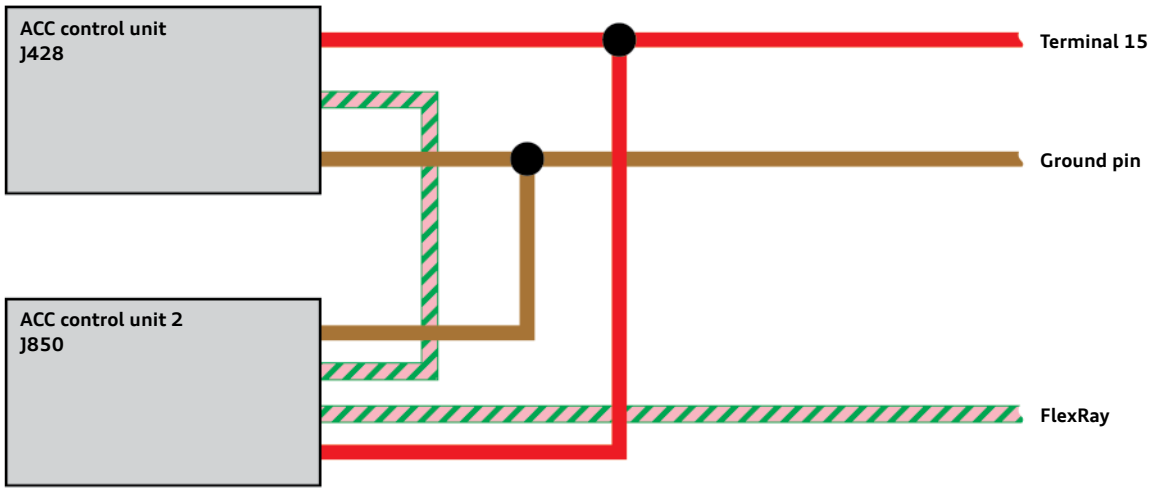

633_063

ACC basic function

The same physical functional principle also applies, of course, to the fourth generation ACC. Targets ahead of the sensor reflect the radar signal, and the reflected signal components are evaluated with regard to amplitude and frequency. Relative speeds and distances are determined by utilising the Doppler effect (or Doppler shift). For detailed information, please refer to Self Study Programme 620 "Audi ACC systems".

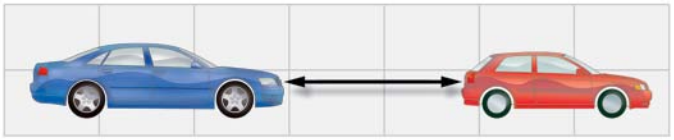

633_064

The ACC is, as per usual, operated using the control stalk.
A new feature is that 5 distances can now be set relative to a vehicle ahead (previously 4).
Another new feature is the LIM button on the ACC control stalk. This is used for switching between ACC mode and speed limiter.



633_068

If the vehicle has Audi Drive Select, the ACC program is coupled to the setting selected here.
Alternatively, ACC can be configured independently using the "Individual" setting.
If the vehicle is not equipped with Audi drive select, the ACC drive program is selected via a separate menu.
The driver displays relevant to ACC are largely identical to those on current Audi models equipped with ACC.
For further information, please refer to the current owner's manual.



633_022

ACC auxiliary functions

The following additional ACC functions are implemented on the Audi A7.

- ACC Stop & Go
- Distance indicator/distance warning
- Evasion assist
- Turning assist
- Traffic jam assist
- Control response when cornering [1)]
- Boost function [1)]
- Overtaking assistance [1)]
- Start-off monitoring [1)]
- Lane change assistance [1)]
- Right lane overtaking prevention [1)]

ACC also supplies important information which is required to implement the predictive efficiency assist systems/functions and for Audi pre sense front.

[1)] The functional principle is identical to that of same-named functions on other current Audi models. For detailed information, please refer to Self Study Programme 620 "Audi ACC systems".

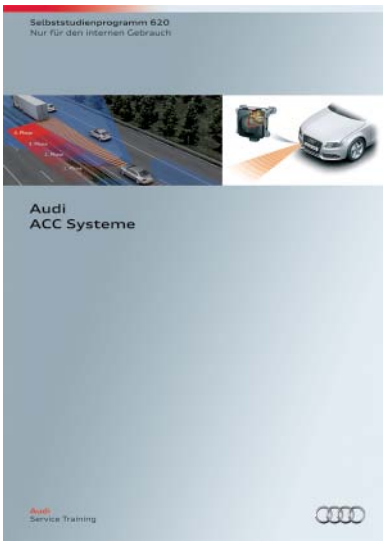

633_064a

ACC Stop & Go

For the first time, ACC also brakes the Audi Q7 in response to vehicles stationary at the time of object detection. The following conditions must be met:

- The vehicle has been detected by ACC and classified as a stationary object.
- The vehicle has also been detected and classified by the camera.
- The detected object has been communicated between ACC and the camera.
- The vehicle is in the same lane.
- It is not possible to bypass the vehicle within the same lane.
- The vehicle must not be travelling faster than 50 kph.

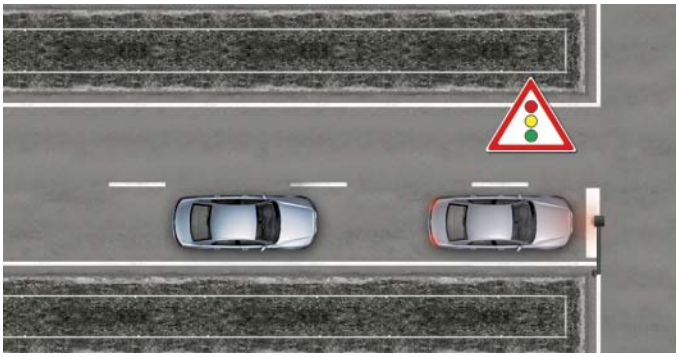

633_064b

Design and function of system components

Distance indicator/distance warning

This new function informs the driver about the current distance to a preceding vehicle and issues a warning if the distance is less than that set by the driver.

A condition is that ACC has not been activated by the driver.

No vehicle in front



Distance indicator if no preceding vehicle is detected *633_065*

Distance indicator

ACC evaluates the measurement data generated by the radar sensors. As soon as the vehicle's speed exceeds 60 kph, the distance to a preceding vehicle is indicated graphically on the display of the dash panel insert.

Vehicle in front



Distance indicator in case of vehicle in front *633_066*

Distance warning

The driver can set different distance warning thresholds in the range between 0.6 s and 3.0 s in the MMI.

If ACC acsertains that the distance to the preceding vehicle is less than the preset distance, a warning is issued on the display of the dash panel insert.

Warning



Distance warning if the distance to the preceding vehicle is less than the distance set by the driver *633_069*

Evasion assist

This new function assists the driver during an evasive manoeuvre. The ACC control unit calculates a suitable lane for the evasive action on the basis of the ACC measurement data and the data generated by the front camera. In the process, the relative speeds, the distance to the preceding vehicle, its width and the transverse offset of the vehicle are factored in.

After a warning jolt is issued, evasion assist is available within a speed range from 30-150 kph, regardless of whether ACC is switched on or off.

Evasion assist is only activated if the driver has initiated an evasive maneouvre. The driver thus determines the evasion direction. The ACC control unit "instructs" the steering assistance control unit J500 of the electromechanical steering to provide a defined amount of steering torque not exceeding approx. 3 Nm. The driver receives effective support which enables the vehicle to leave its lane and to bypass the preceding vehicle while maintaining the appropriate safety distance. If ACC ascertains that evasive action is no longer possible and a collision is unavoidable, evasion assist is no longer activated.

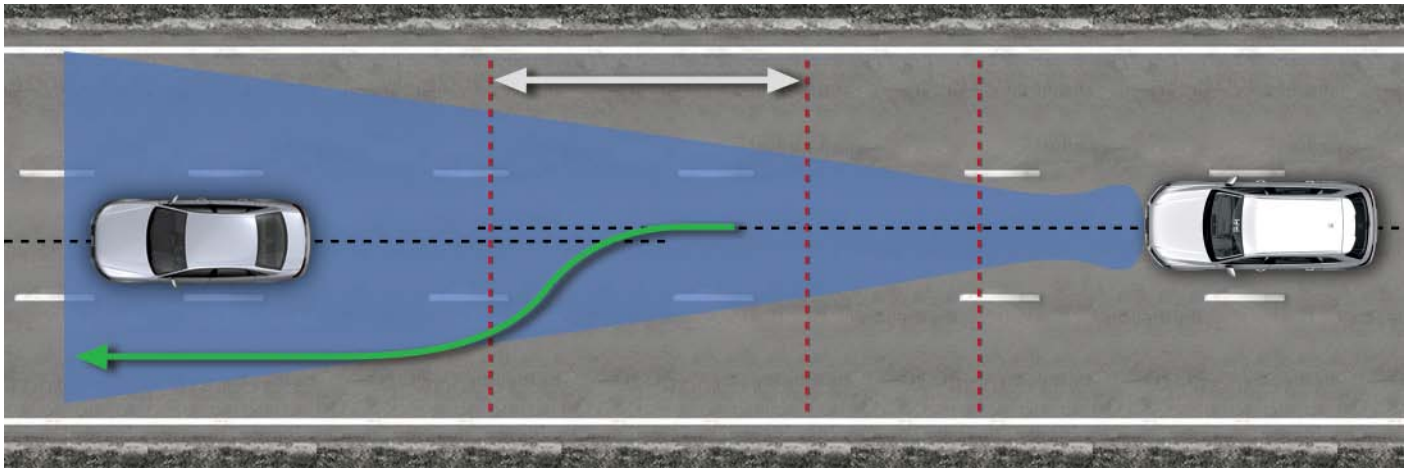

633_070

Turning assist

Turning left (or right in RHD markets) is potentially hazardous because the vehicle has to cross the oncoming lane. Collisions involving oncoming vehicles are statistically among the most common causes of accident. Turning assist was developed specially to make turning left (right in RHD markets) safer.

The function utilises the radar signals and the data generated by the front camera to scan the lane ahead, lane markings and oncoming traffic.

The monitoring of oncoming traffic is initiated by operating the direction stalk. The data used for this purpose is evaluated in the ACC control unit when ACC is deactivated The function is active in a speed range from approx.
2 - 10 kph.

If a collision hazard is detected, the ACC control unit instructs the ESC control unit to build up brake pressure. The vehicle is then braked to a standstill in its own lane. If the vehicle has already left its lane, turning assist is deactivated.

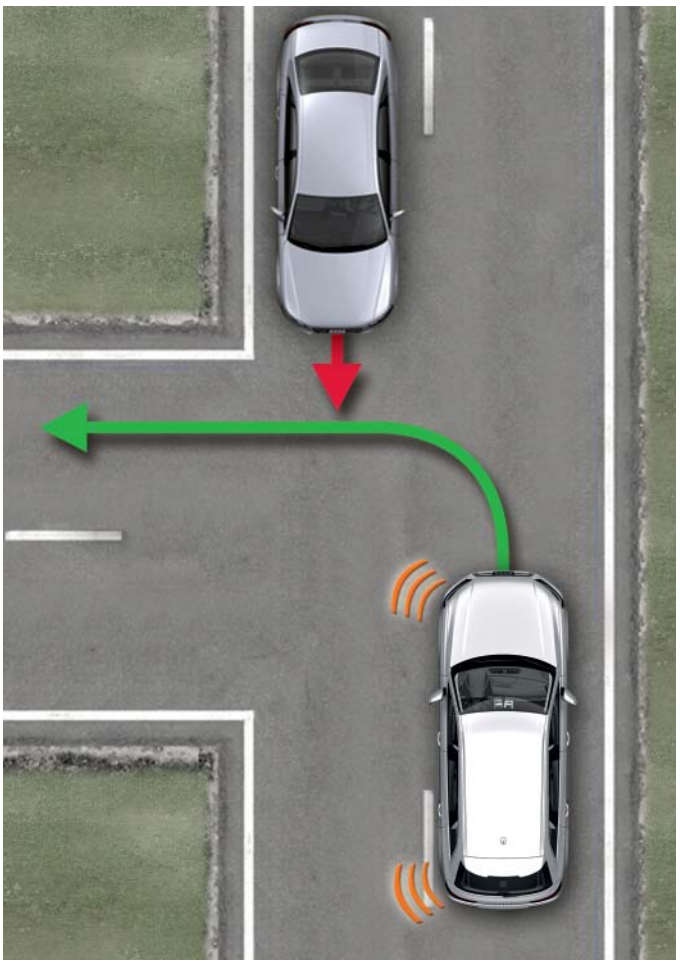

633_071

Note

The evasion assist and turning assist functions are components of Audi pre sense front. For further information, please refer to Self Study Programme 637.

Traffic jam assist

Function

This new function aids the driver in traffic jam situations and in slow-moving traffic up to a driving speed of 65 kph. The function is identical to the existing stop & go function, with additional lateral guidance of the vehicle. This means that the vehicle is guided centrally behind a column (at least 2 vehicles) of vehicles ahead. This does not, however, necessarily mean that the vehicle is guided in the centre of its own lane.



633_072a

System limitations

Under certain conditions it is not possible to execute the functions described here. This is the case if:

- no countertorque is sensed at the steering wheel (the driver does not have a hand on the steering wheel) for a set amount of time.
- the lane has a radius of < 150 m.
- the available lane width is insufficient.
- the lane cannot be scanned for enough ahead.
- the distance between the vehicle and the edge of the lane is too small.

If a system limiation is reached or exceeded, the driver is prompted both audibly and visually to take over. If the driver does not respond to this prompt, ACC instructs ESC to comfortably brake the vehicle to a standstill (deceleration approx. -2 m/s^2). When the vehicle comes to a standstill, the hazard warning flashers are activated.

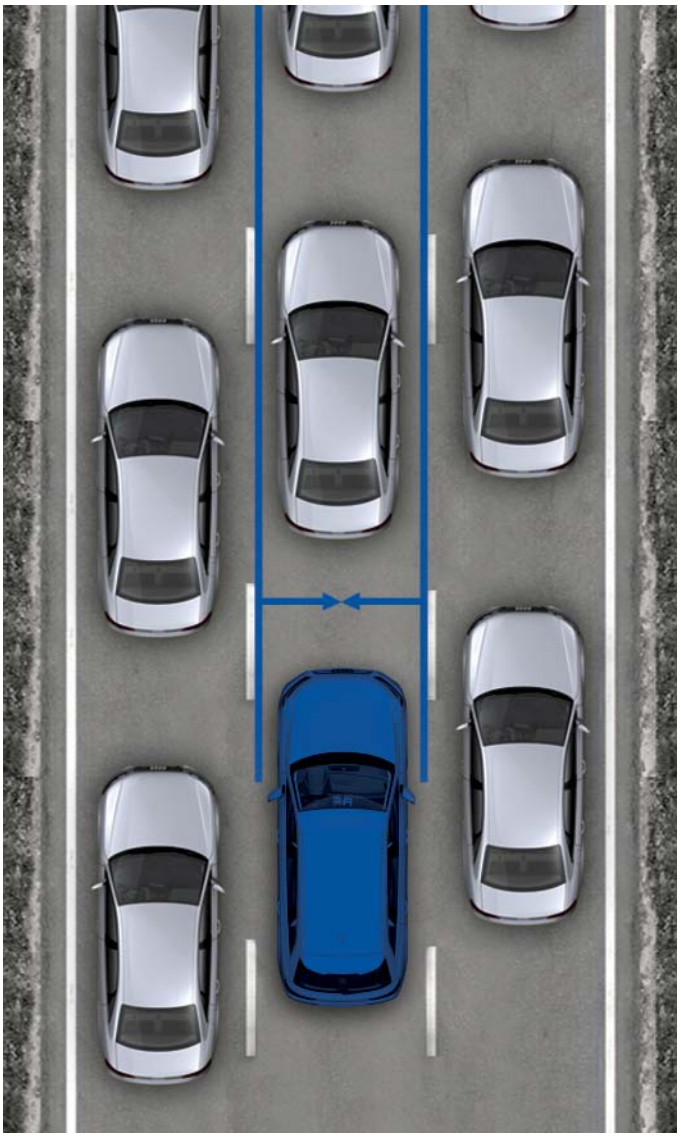

633_072

Traffic jam assist

Function

The graphic shows the signal flow.

The ACC control unit processes the measurement data generated by the wheel sensors, the ultrasound sensors (for sensing that the vehicle is ready to go) and the front camera for driver assistance systems R242. The ACC control unit calculates from this information the traffic flow ahead (distances and speeds of vehicles and relative speeds), as well as the length and width of the lane/travel envelope. To achieve exact guidance of the vehicle in the calculated lane, ACC determines the control requirements for steering, drive motor and ESC. The ACC control unit transfers the general steering control inputs to the front camera for driver assistance systems R242. The camera calculates concrete specifications (steering direction, steering angle) and sends this information to the power steering control unit J500.

If ACC, by evaluating the signals from the ultrasound sensors and the measurement data supplied by the camera, acsertains that the vehicle is ready to go, ACC sends a specific acceleration request to the engine control unit. If acceleration and deceleration is requested by ACC, special software in the engine control unit decides what adjustments are needed to meet the engine torque demand.

The power steering control unit J500 reads in the measurement data from the steering torque sender and sends it to the front camera for driver assistance systems R242. The latter evaluates on the basis of the measurement data whether countersteer torque is present, i.e. whether the driver or not has his hands on the steering wheel. The ACC control unit receives this information continuously from the camera. If the driver has not placed a hand on the steering wheel within a set amount of time, a braking request is sent to the ESC after audible and visual warnings have been issued.

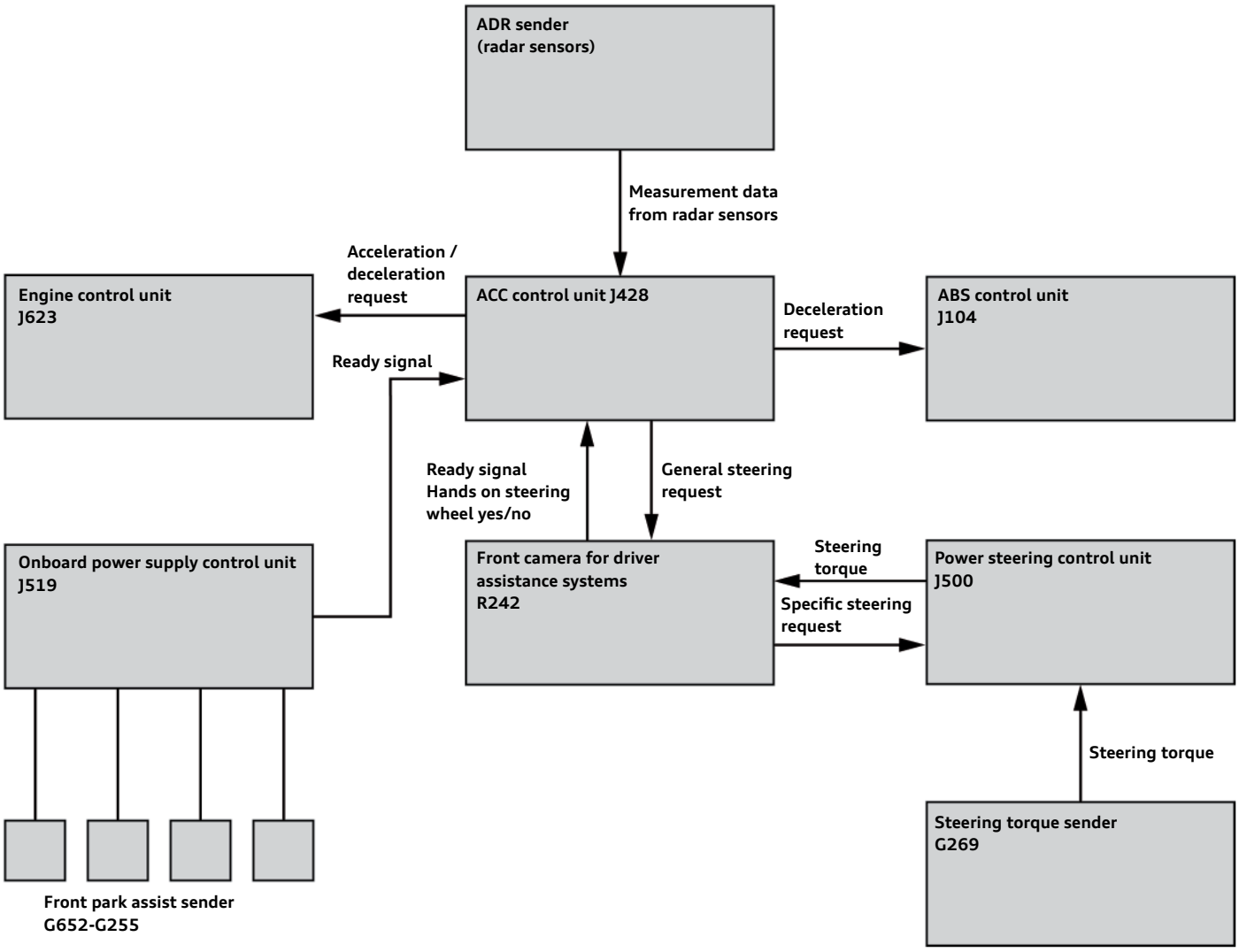

633_073

Operation and driver information

A requirement for the activation of traffic jam assist is that the function is switched on in the MMI.



633_074a

If ACC is switched on and active, traffic jam assist is switched on by pressing the button on the turn signal stalk.



633_074b

If a traffic jam situation is detected, this is indicated to the driver by a "ready" message.

A condition for the detection of a traffic jam situation is the detection of vehicles ahead by both ACC and the front camera for driver assistance systems.



633_074

If traffic jam assist is active, this is indicated to the driver visually via the dash panel insert display. If "Car" - "Driver assist" is also activated on the MMI display, a corresponding graphic is generated. The two green lines at the sides indicate that lateral vehicle guidance is active.



633_076



633_075

If a driver action is necessary, this is indicated audibly and visually on the dash panel insert display. If "Car" – "Driver assist" is also activated on the MMI display, a corresponding diagram is generated in this case too.



633_064e



633_064d

Predictive efficency assist with ACC
This new function is available on the German market as an option in combination with Navigation+ and the head-up display. Country versions are constantly being added.
This assistance system represents a major upgrade to the existing ACC control system. The use of predictive navigation data makes it possible to incorporate speed limits, the road ahead (corners, intersections, roundabouts etc.) and the terrain topology (gradients, inclines) into ACC control operations.

The ACC control unit essentially communicates with the following systems in order to implement additional functions:

Front camera for driver assistance systems R242
The camera supplies traffic sign recognition data

Engine control unit
The engine control unit computes coasting and overrun curves making allowance for traction resistances and sends this information to the ACC control unit. The ACC control unit computes acceleration setpoints or a coasting request making allowance for the ambient conditions (speed limits, corners) and sends this information to the engine control unit.
The engine control unit implements the request by producing a corresponding amount of engine torque and sends the coasting request to the gearbox control unit.

In addition to reducing the strain on the driver, this assistance system permits an anticipatory driving style, where acceleration, constant-speed driving/coasting and deceleration/braking are co-ordinated in such a way as to allow efficient operation of the vehicle. As before, the driver can adapt the control characteristic to his individual preferences (from comfortable to sporty) by selecting the drive program in Audi drive select.

Audi drive select
By selecting the drive profile, the driver sets the control parameters.

MMI
In the menu the driver selects whether to base control operations on speed limits and/or the road ahead (especially when cornering). To be able to utilise the coasting mode, the "intelligent coasting" function must also be activated in the efficiency assist menu.

ESC
If the necessary braking effect cannot be achieved by reducing engine torque alone, the ESC is assigned to this task.
The signal flow is shown in the graphic.

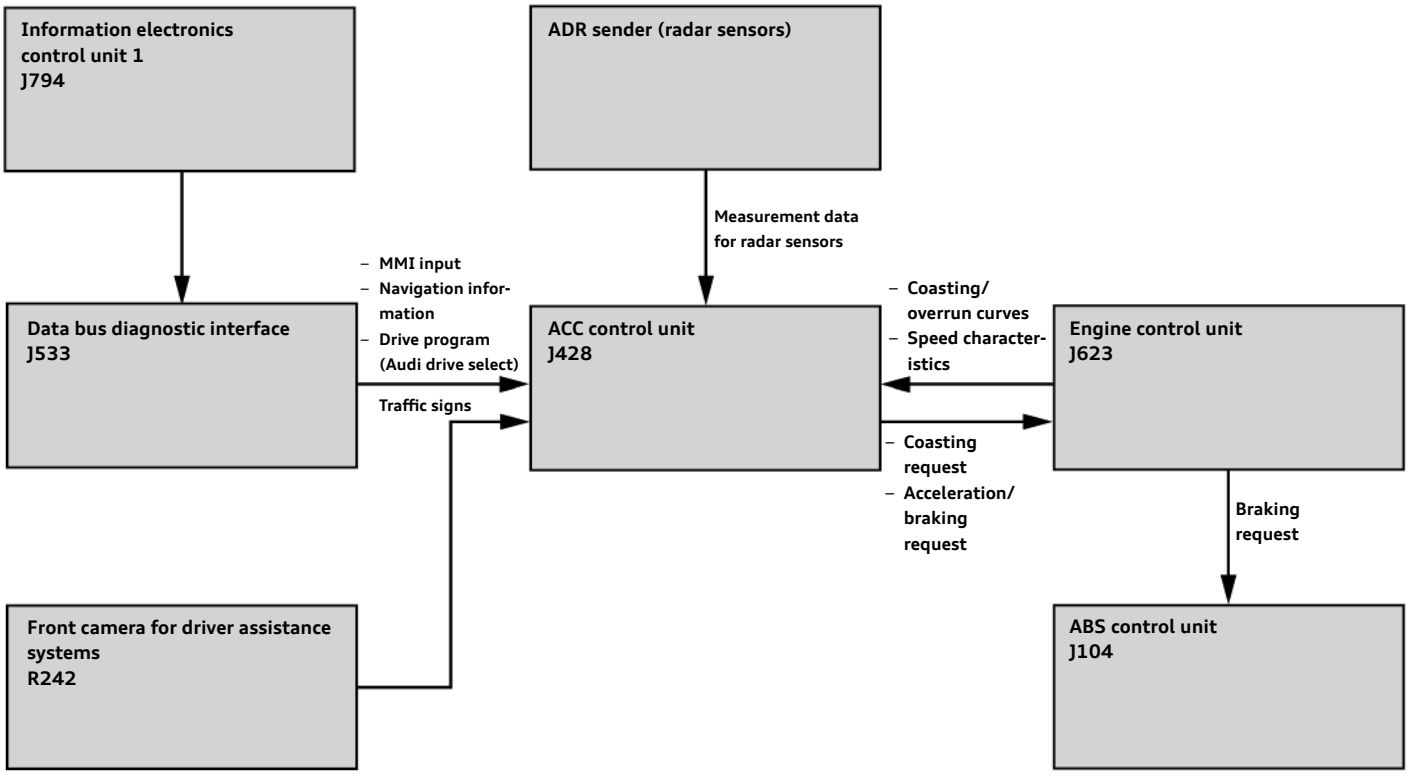

633_081

To use predictive efficiency assist with ACC, ACC must be switched on.



633_082

If the menu item "Adaptation to route ahead" is activated, ACC controls the cornering speed. Depending on the drive program selected, a defined amount of lateral acceleration is produced when cornering. If the set preference speed is too high, ACC reduces speed when approaching the corner. In contrast to the control response during cornering (refer to SSP 620), the vehicle's speed is also significantly reduced (e.g. from 100 kph to 50 kph) if necessary.

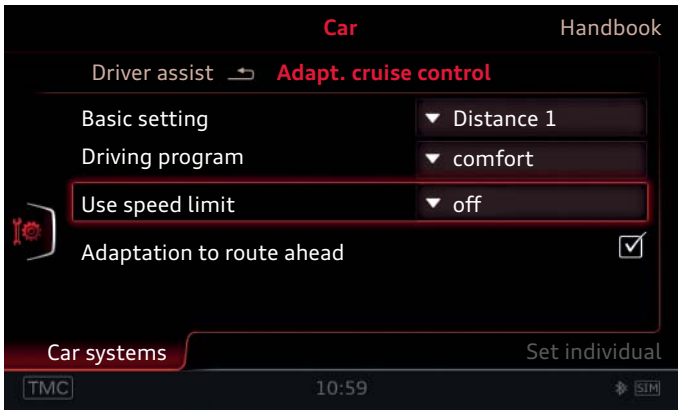

633_083

The system settings made by the driver for "Efficiency assist/ intelligent coasting", "Use speed limit" and "Adaptation to route ahead" are preserved even after a terminal 15 cycle.
The activation of predictive efficiency assist with ACC during the previous driving cycle is indicated to the driver in the status bar on the centre display of the dash panel insert for a short amount of time (approx. 5 s) if the driver switches on ACC.



633_084

Setting the preference speed in combination with "Use speed limit"
The preference speed set by the driver is maintained until the next change in the speed limit. The maximum speeds defined by the following speed limits are then implemented. The driver always has the option of setting a different (higher) preference speed within an existing speed limit. This in turn applies until the next change in speed limit. When "Use speed limit" is activated on German motorways, a speed of 130 kph is generally implemented as the guideline speed if no speed limit is in force.

Service operations

The components of the ACC system are also diagnosable in the fourth generation. The ACC control unit (master) J428 can be addressed with the diagnostic tester using diagnostic address 13, while ACC control unit 2 (slave) J850 can be addressed using diagnostic address 8B.



633_085

The system monitors the horizontal and vertical settings of the radar sensors (senders) on the basis of a statistical evaluation of the objects detected. The system is deactivated upwards of a horizontal misalignment angle of ± 2.0 ° and upwards of a vertical misalignment angle of ± 3.0 °.
Both radar sensors are adjusted in service centres.
It is necessary to adjust the radar sensors if certain types of work are performed on the vehicle (e.g. rear axle tracking adjustment, refer to workshop manual).
The adjustment is made according to the known procedure using setting device VAS 6430/1 with ACC reflector mirror VAS 6430/3. The only difference is that a new setting tool is used. Instead of the 3.5 mm hexagon socket wrench used previously, a Torx T20 tool is now used.

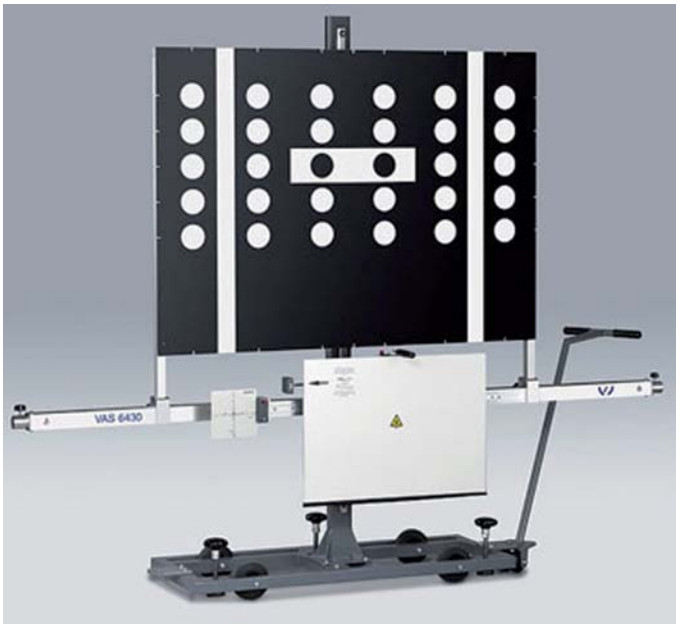

633_067

Reference
For detailed information on setting the radar sensors, please refer to Self Study Programme 620, the current workshop manual, the wheel alignment computer and the diagnostic tester.

Wheels and tyres

Overview

The Audi Q7 comes as standard with 18" wheels. The 18" to 21" wheels are optional. The range of tyres for the engine versions available at launch extends from 255/60 R18 to 285/40 R21. 19" and 20" tyres with run-flat properties and 20" offroad tyres with reinforced sidewalls are standard or optional in certain markets.

The Tire Mobility System (TMS) is standard equipment. A 6.5Jx20 collapsible aluminium wheel is optional for the 5-seater version of the Audi Q7.
The vehicle comes with a jack if ordered factory-fitted with winter wheels and if equipped with a collapsible wheel.

Standard wheels	Optional wheels	Winter wheels
 **Lightweight forged wheel** [1)] 8.0J x 18 ET25 255/60 R18 4M0.601.025.A	 **Flow form cast wheel** 8.5J x 19 ET28 255/55 R19 4M0.601.025.AC	 **Lightweight forged wheel** [1)] 8.0J x 18 ET25 255/60 R18 4M0.601.025.A
	 **Flow form cast wheel** 8.5J x 19 ET28 255/55 R19 4M0.601.025.C	 **Flow form cast wheel**[1)] 8.0J x 19 ET28 255/55 R19 XL M+S 4M0.601.025.F
	 **Flow form cast wheel** 9.0J x 20 ET33 285/45 R20 XL 4M0.601.025.AD	 **Flow form cast wheel**[1)] 8.0J x 20 ET28 255/50 R20 XL M+S 4M0.601.025.G
	 **Forged wheel** 9.5J x 21 ET31 285/40 R21 XL 4M0.601.025.E	 **Flow form cast wheel** 9.0J x 20 ET33 285/45 R20 XL M+S 4M0.601.025.AE

[1)] suitable for snow chains

Low tyre pressure indicator

The second-generation low tyre pressure indicator (RKA+) is available as basic equipment for the Audi Q7. In terms of design, function, operation, driver information, servicing and diagnostics, this system is identical to the system already in use on other Audi models.



633_088

Tyre pressure monitoring system

A third-generation direct tyre pressure monitoring system is optional for the Audi Q7.

Design and function

In the third-generation system the aerial for rear tyre pressure monitoring R96 is integrated in the tyre pressure monitoring control unit J502. The control unit is attached to the upper rear axle subframe cross-member. It communicates via an Extended CAN. As before, the tyre pressure sensors G222-G226 are attached to the tyre valves on the inside of the wheel. When the vehicle exceeds a speed of approx. 25 kph, the relevant sensor is activated by an internal microswitch.

The measured tyre pressure and temperature values are transmitted by radio signals (433 or 315 MHz depending on country specification). The aerial receives the signals and the control unit evaluates them. The sensors are inactive when the vehicle is stationary.



633_090

Each sensor has its own identication number (ID), which is a component part of the transmitted radio signals. The control unit "learns" independently which sensors (IDs) belong to which vehicle. The control unit determines the positions of the sensors in the vehicle by evaluating the reception level (differentiation between front and rear axles) and the direction of rotation, which is also transmitted by with the radio signal (differentiation between left and right hand sides).



633_091

Tyre pressure sensor

Operation and driver information
The driver has 2 operating options in the MMI:

1. Store tyre pressures
2. Display tyre pressures

Store tyre pressures
To be able to monitor the tyre pressures, the control unit needs to know the nominal tyre pressures. When "Store tyre pressures" is activated, the currently set tyre pressures and temperatures are assigned to the respective sensors (and thus the wheel positions on the vehicle) during the next trip. The values then serve as nominal values.
This function must be executed whenever:

- tyre pressures are changed.
- a wheel is changed.
- wheels with new sensors are used.

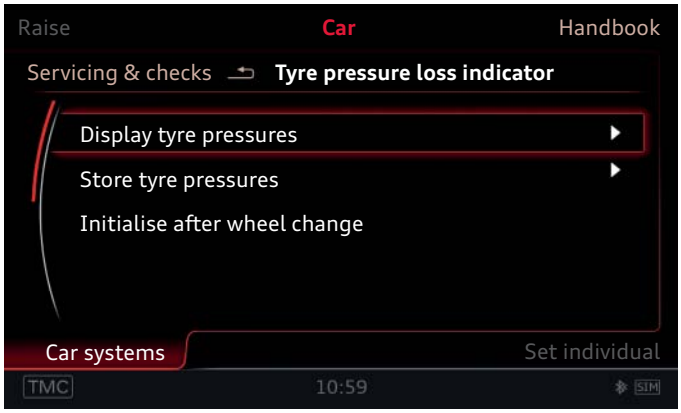

633_092

Display tyre pressures
As the sensors are inactive when the vehicle is stationary, a requirement for display is that the vehicle is driving. If this menu item is selected, the currently measured tyre pressures and temperatures of the 4 wheels are displayed. If the tyre pressure is displayed in yellow font, the current measured value is less than the nominal value. If a current measured value is very low, it is indicated in red font.

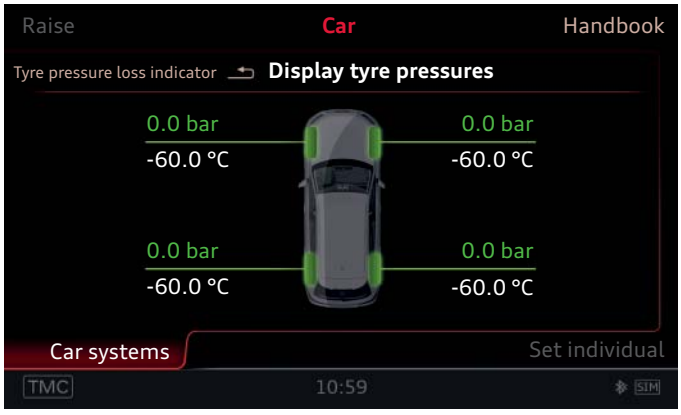

633_093

Warnings
If the current tyre pressure is less than the nominal value, a warning symbol is displayed to the driver.
If the current tyre pressure reaches a critical level, an additional text message is displayed. If only one wheel is affected, it position on the vehicle is indicated.



633_093a

Service operations

The tyre pressure monitoring system has self-diagnostic capability and can be accessed using diagnostic address 65. If system faults are detected, they are indicated to the driver by the warning symbol and in plain text and registered in the event memory.

The control unit is programmed online after replacement.



633_090a

The tyre pressure sensors can be replaced separately in service centres if the tyre valve is undamaged.

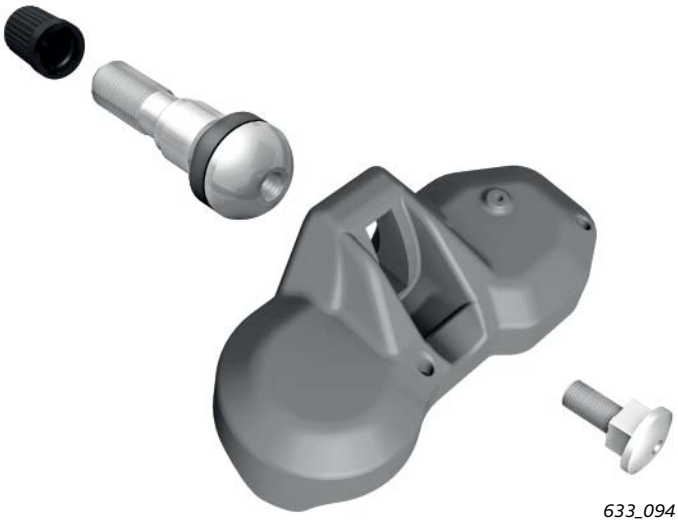

633_094

Note

The connection between the tyre valve and the sensor is a new design, which means that special attention must be paid to proper fitting of the sensor/valve unit in the wheel. Please adhere to the values given in the workshop manual. This will help avoid damaging components and ensure that the system is fully functional.

Self study programmes

For further information, i.e. information supplementary to this self study programme, please refer to the following self study programmes:



SSP 475 Audi ESC systems

Order number: A11.5S00.79.20



SSP 634 Audi Q7 (type 4M) **Onboard power supply and networking**

Order number: A15.5S01.19.20

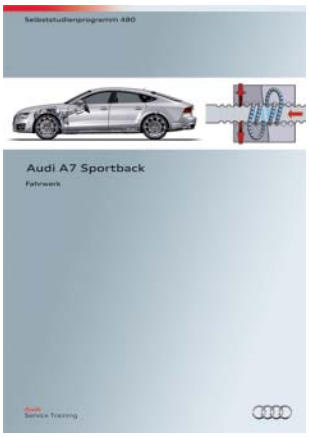

SSP 480 Audi A7 Sportback Chassis

Order number: A10.5S00.73.20



SSP 635 Audi Q7 (type 4M) **Driver assistance systems**

Order number: A15.5S01.20.20



SSP 612 Audi A3 '13 Chassis

Order number: A12.5S00.96.20



SSP 637 Audi Q7 (type 4M) **Occupant protection and infotainment**

Order number: A15.5S01.22.20

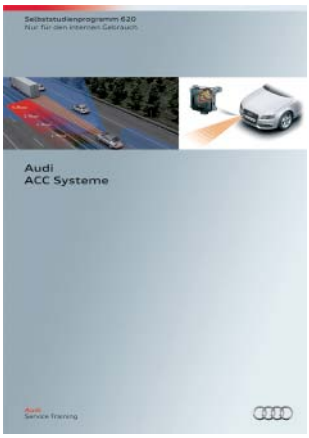

SSP 620 Audi ACC Systems

Order number: A13.5S01.04.20

All rights reserved.
Technical specifications are subject to change.

Copyright
AUDI AG
I/VK-35
service.training@audi.de

AUDI AG
D-85045 Ingolstadt
Technical status 02/15

Printed in Germany
A15.5S01.18.20